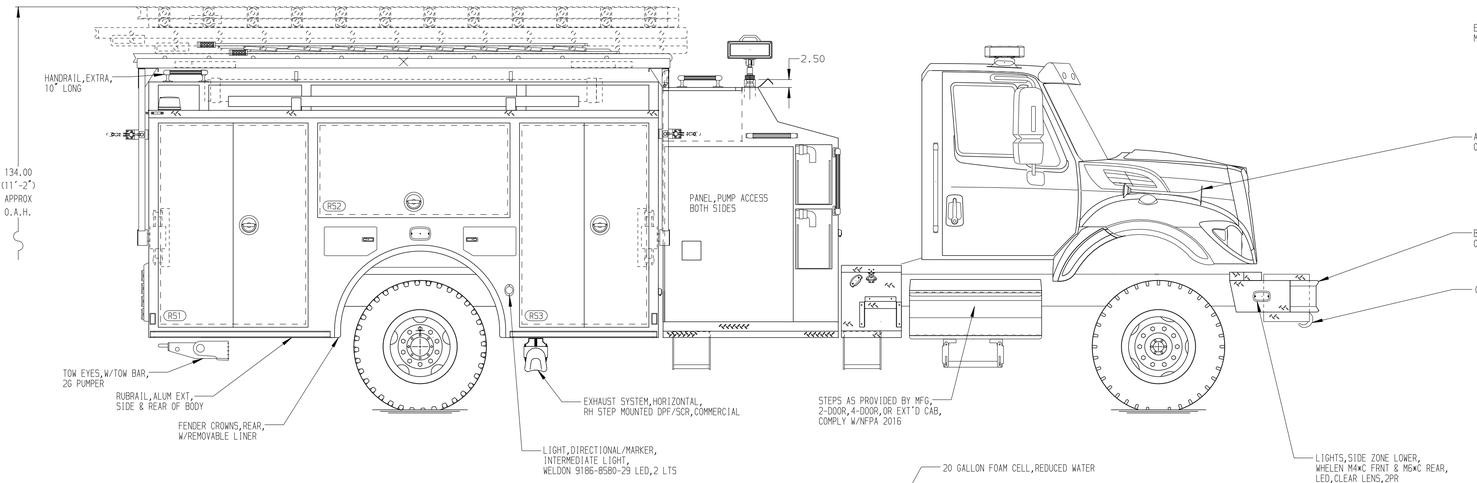

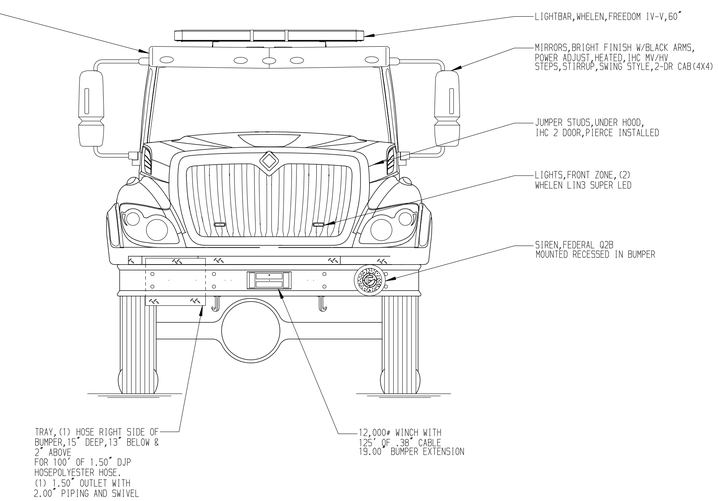

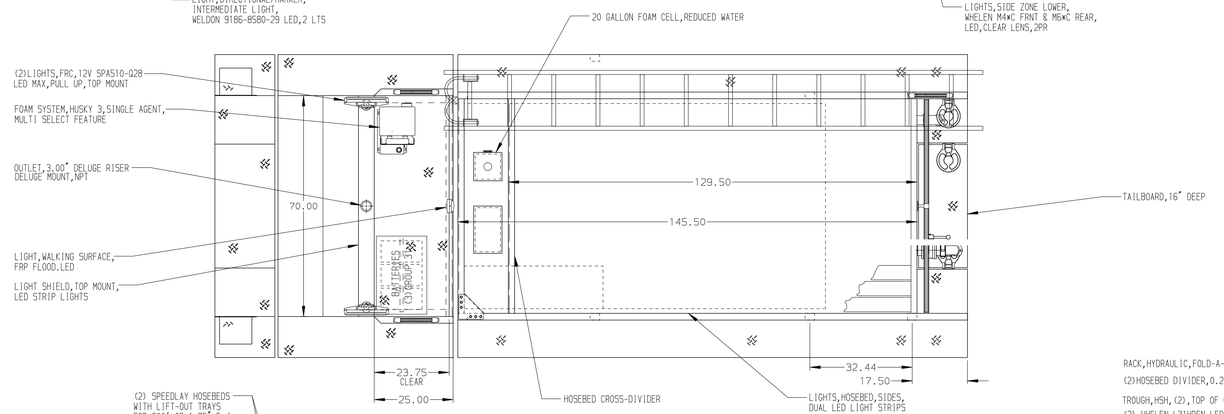

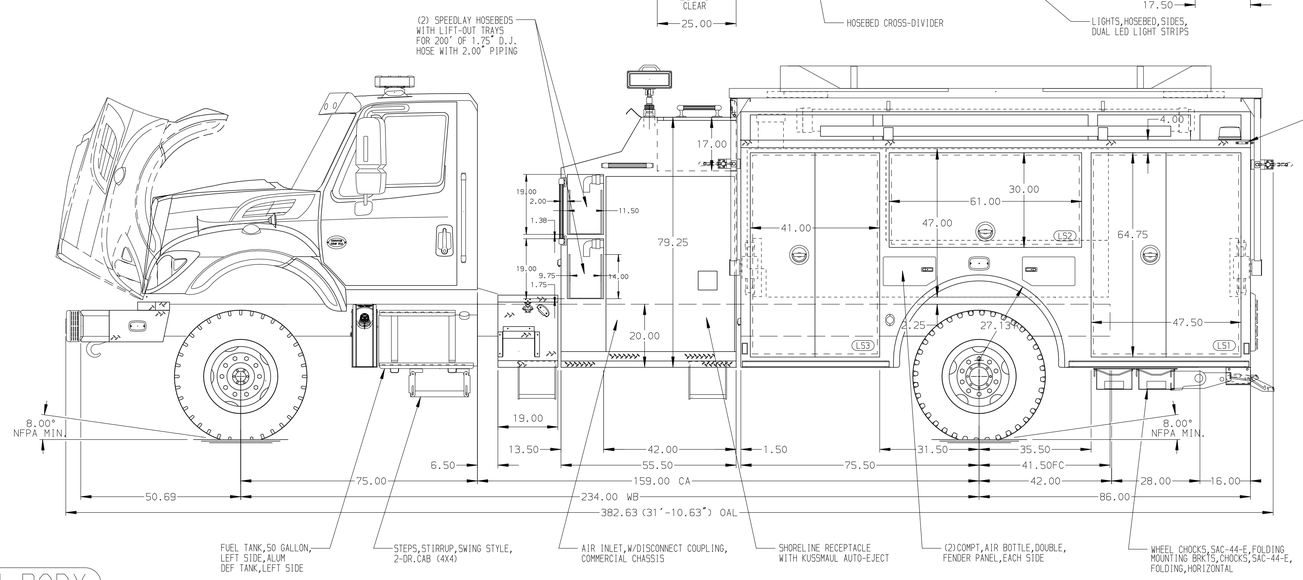

HOSEBED CAPACITIES
1. 400' OF 3.00" D.J. POLY HOSE
2. 400' OF 5.00" D.J. POLY HOSE
3. 200' OF 3.00" D.J. POLY HOSE

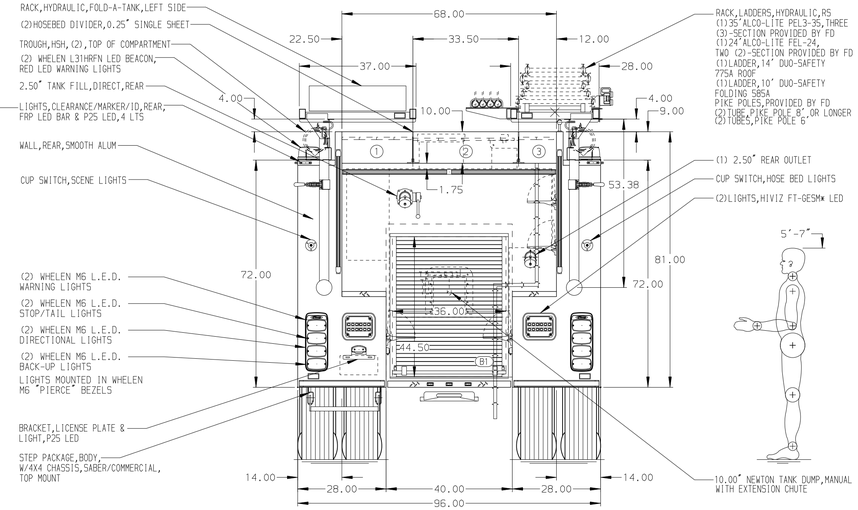

ALUMINUM BODY

NOTE

DIMENSIONS SHOWN ARE APPROXIMATE AND ARE SUBJECT TO MINOR DEVIATIONS AS MAY OCCUR OR BE NECESSARY IN CONSTRUCTION.
MINOR DETAILS NOT SHOWN.

REV	DATE	BY	CH
7	04AUG25	RHU	CCS
6	07MAY25	RHU	CCS
5	17MAR25	ADP	AJA

CHASSIS DATA
MAKE: IHC
MODEL: HV507 4X4

Pierce MANUFACTURING INC.

TITLE: 1250-D-1000P,980G WATER,20G FOAM,161"ALUMINUM,PUMPER 42"TOP MNT W/19"WLKWY,(2)1.50"SPEEDLAYS
FOR: CAPON VALLEY FIRE COMPANY WARDENSVILLE,WV
DWG NO.: 41029AD

JOB NO.	41029
SCALE	1:24
DATE	
DRAWN BY	ADP 03MARCH25
CHECKED BY	AJA 06MAR25
SHEET SIZE	D
SHEET NO.	1 OF 1

View File Created 04-AUG-2025 13:19:34