PUMPER

BODY
Medium Galvanneal 2nd Gen Pumper

CHASSIS
Enforcer Chassis

ELECTRICAL SYSTEM
MUX

CHASSIS

AXLE, FRONT, CUSTOM
20,000 Lb Steertek Axle

AXLE, REAR
24,000 Lb Meritor Axle

ENGINE
455 HP Cummins X12 Engine

TRANSMISSION
ALLison 6th Gen, 4000 EVS P

BUMPER
16" Extended Stainless Steel

CAB
6000 Enforcer Cab

BODY

TOTAL TANK CAPACITY
525 Gallon New York Style Poly Tank

WATER CAPACITY
500 Gallons of Water

FOAM CELL CAPACITY
25 Gallon Foam Cell

COMPT, PUMPER, REAR
30.75" FF Lap Rear Compt

COMPT, PUMPER, LEFT SIDE
152" Rollup Full Height Front & Rear

COMPT, PUMPER, RIGHT SIDE
152" Rollup Full Height Front & Rear FDLER

FIRE SUPPRESSION

PUMPHOUSE
48" Control Zone Side Mount

PUMP
1500 GPM Hale Qmax

CROSSLAYS, 1.50"
(2) 1.50" Standard Capacity

CROSSLAYS, 2.50"
2.50" Crosslay Not Required

SPEEDLAYS
Speedlays Not Required

GENERATOR
Generator Not Required

FOAM SYSTEM
Foam Pro 2001 Single Agent Foam System

SAFETY

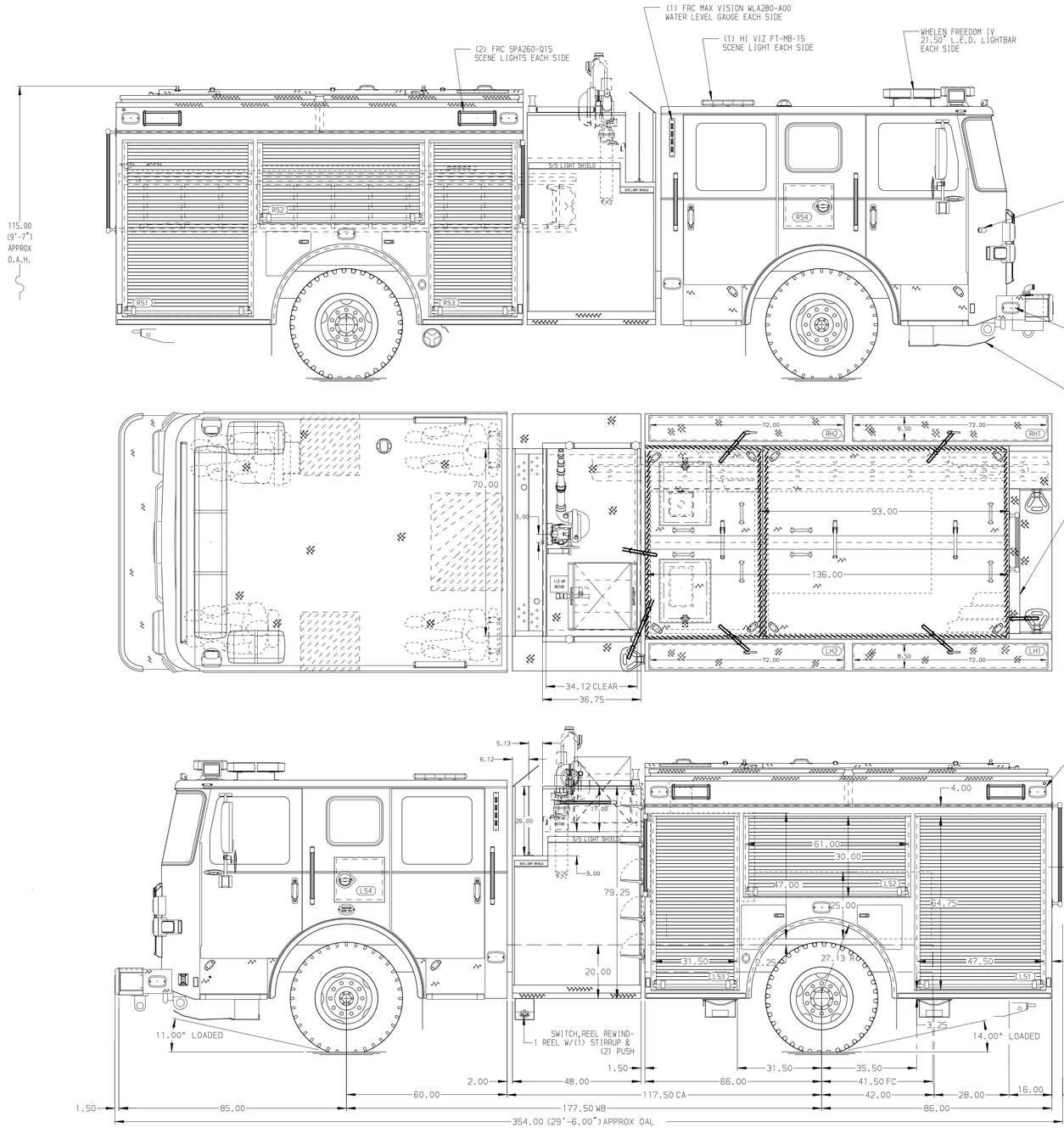

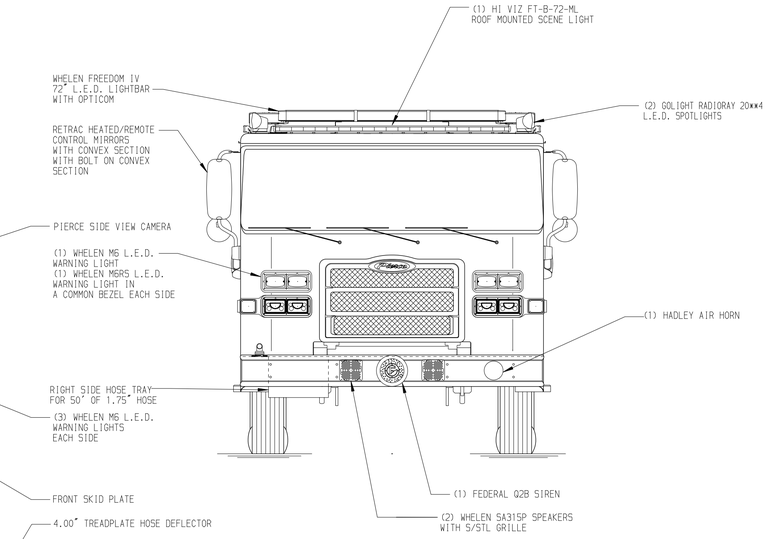

HOSEBED CAPACITIES
1. 1500' OF 3.00" D.J. POLY HOSE
2. 200' OF 2.50" D.J. POLY HOSE
3. 200' OF 1.75" D.J. POLY HOSE

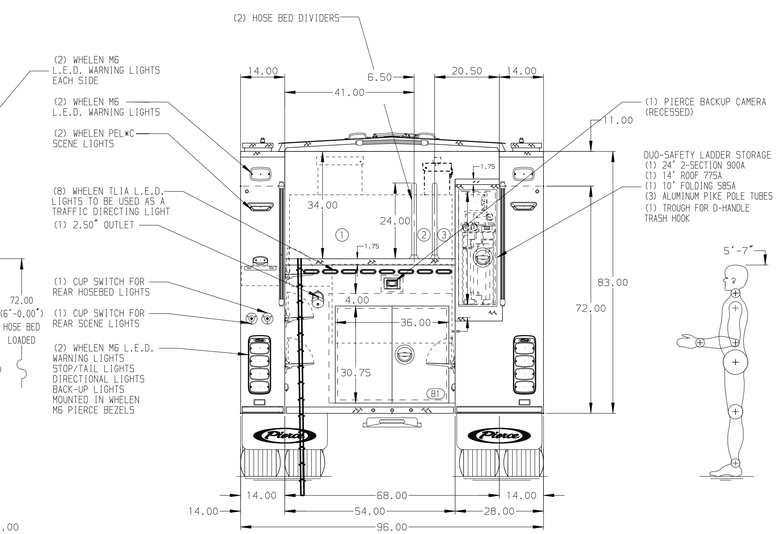

NOTE

DIMENSIONS SHOWN ARE APPROXIMATE AND ARE SUBJECT TO MINOR DEVIATIONS AS MAY OCCUR OR BE NECESSARY IN CONSTRUCTION.
MINOR DETAILS NOT SHOWN.

1. ONE 1.50 OUTLET WITH 2.00 PIPING AND SWIVEL LOCATED ON TOP OF THE RIGHT SIDE OF THE BUMPER
2. SHORELINE RECEPTACLE WITH BLUE SEA SURE EJECT ON THE DRIVER'S SIDE CAB CORNER
3. AIR INLET WITH DISCONNECT COUPLING IN THE DRIVER SIDE STEPWELL
4. HANNAY MODEL SBEF 28-25-26-12 BOOSTER REEL FOR 200' OF 1.00" NIEDNER REEL TEX HOSE IN THE DRIVER'S SIDE OF THE CARGO AREA OVER THE PUMP
5. AIR OUTLET ON THE PASSENGER'S SIDE PUMP PANEL

REV	DATE	BY	CH
B	18JUL25	LST	DTJ
A	06JUN25	AMI	DTJ

CHASSIS DATA
MAKE: PIERCE
MODEL: ENFORCER

Pierce MANUFACTURING INC.

TITLE: Pierce Pumper Approval Drawing
FOR: South Coast Fire Equipment
DWG NO.: 41052AD-SH1

JOB NO. 41052 01-03
SCALE 1:24
DRAWN BY LST — DATE 17APR25
CHECKED BY SGH — 18APR25
SHEET SIZE D
SHEET NO. 1 OF 2

View File Created 06-AUG-2025 10:33:56