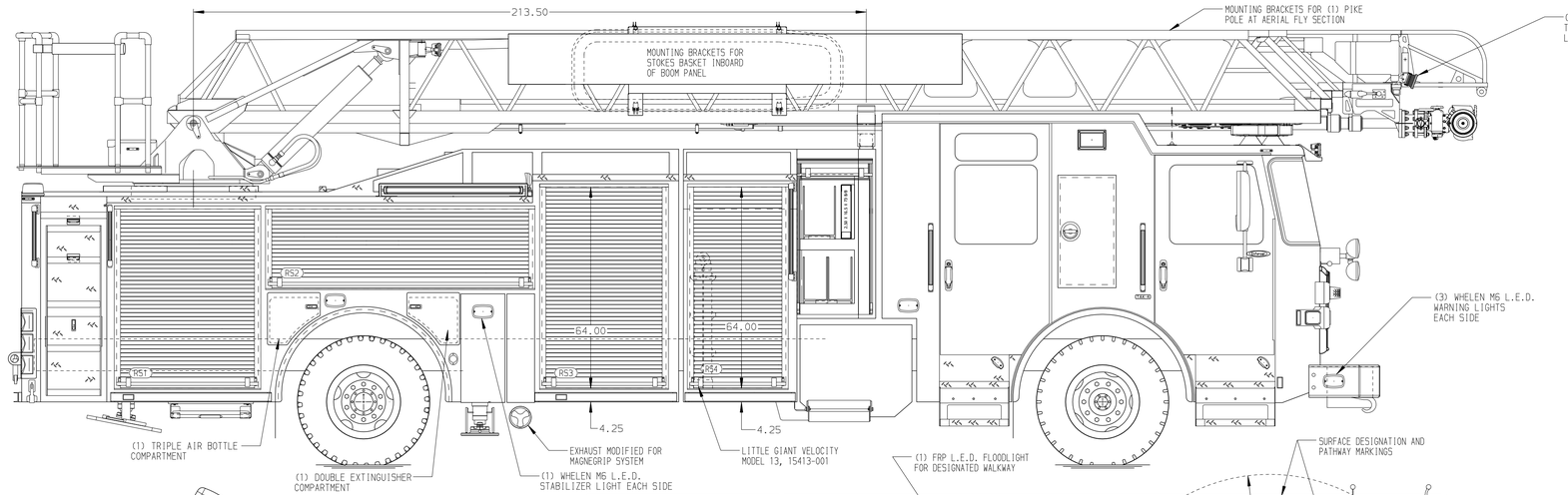

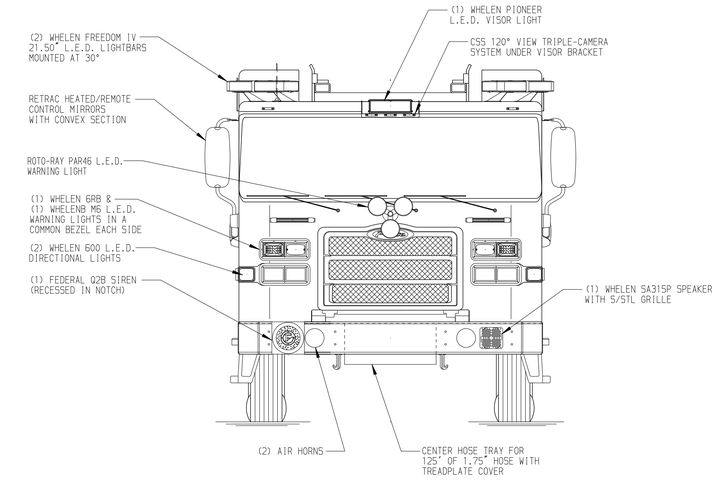

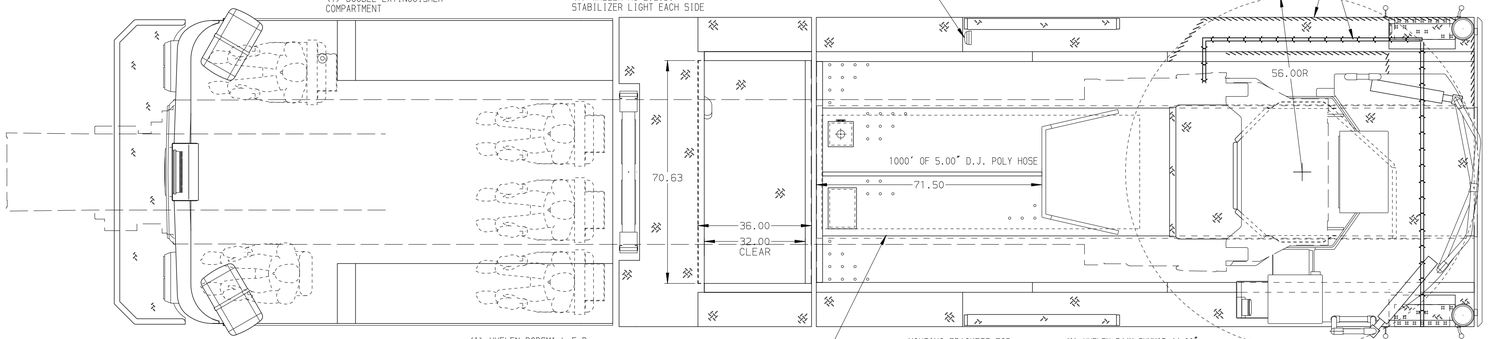

BODY	TOTAL TANK CAPACITY
107' ASL Aluminum Body PUC	500 Gallon Poly Tank
COMPT,LEFT SIDE FRONT	WATER CAPACITY
Full Height Rollup Forward	480 Gallons of Water
COMPT,LEFT SIDE REAR	FOAM CELL CAPACITY
Full Height Rollup Rearward	20 Gallon Foam Cell
COMPT,RIGHT SIDE FRONT	FOAM SYSTEM
Full Height Rollup Forward	Foam System External
COMPT,RIGHT SIDE REAR	
Full Height Rollup Rearward	

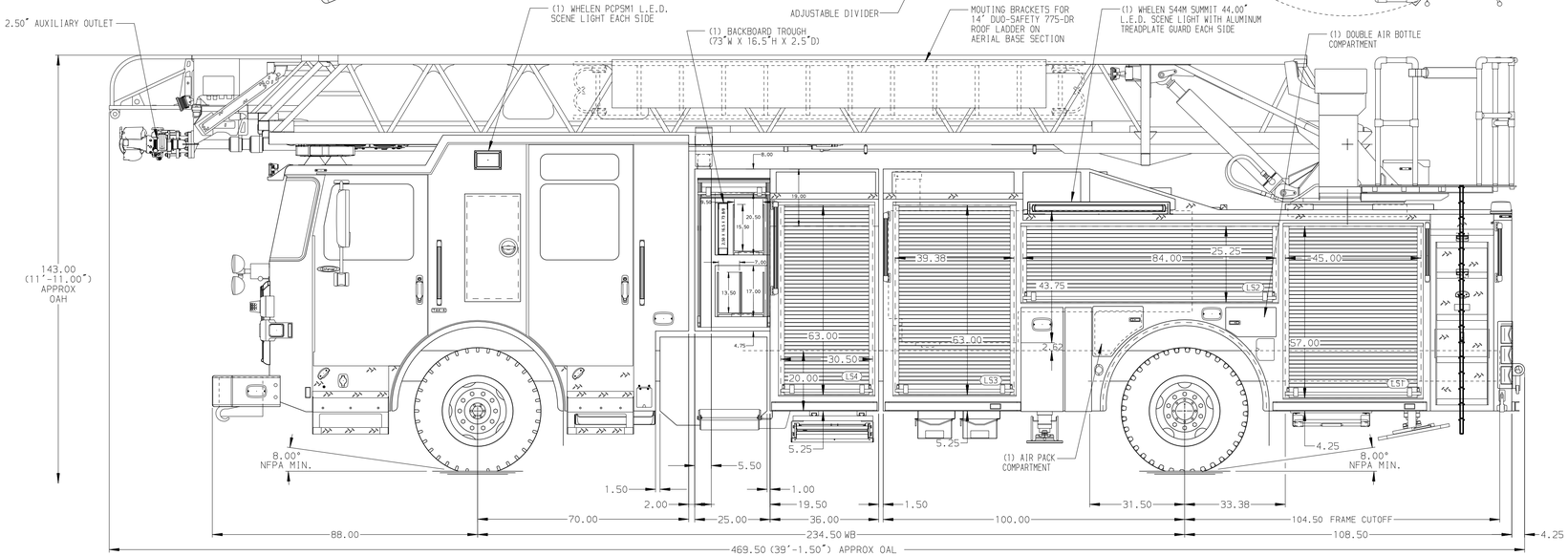

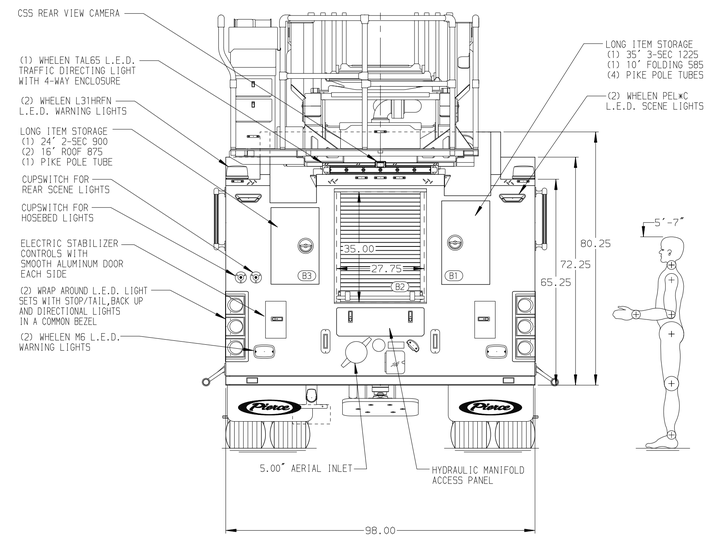

CHASSIS	CAB	AXLE,FRONT,CUSTOM	TRANSMISSION	PUMPHOUSE	CROSSLAYS,1.50"	SPEEDLAYS	SAFETY
Enforcer Chassis, PUC	7010 Notched Enforcer Cab, PUC	24,000 Lb TAK-4 Axle	Allison 6th Gen, 4000 EVS P	Control Zone, PAL/PAP PUC	(2) 1.50", Poly Trays, 200'		Side Roll and Frontal Impact Protection
ENGINE	BUMPER	AXLE,REAR		PUMP	CROSSLAYS,2.50"	GENERATOR	
510 HP Paccar MX13 Engine	19" Extended Painted Steel	33,500 Lb Meritor Axle		1500 GPM Pierce PUC	(1) 2.50", Poly Tray, 200'	Generator Not Required	

NOTE

DIMENSIONS SHOWN ARE APPROXIMATE AND ARE SUBJECT TO MINOR DEVIATIONS AS MAY OCCUR OR BE NECESSARY IN CONSTRUCTION.
MINOR DETAILS NOT SHOWN.

1. NO LIMITED RETRACTION REQUIRED
2. ONE 1.50 OUTLET WITH 2.00 PIPING AND SWIVEL LOCATED IN CENTER BUMPER TRAY
3. SHORELINE RECEPTACLE WITH KUSSMAUL SUPER AUTO-EJECT LOCATED IN DRIVER SIDE STEPWELL
4. AIR INLET WITH DISCONNECT COUPLING IN THE DRIVER SIDE STEPWELL
5. BATTERY CHARGER LOCATED PER ORDER
6. BATTERY CHARGE INDICATOR LOCATED ON DRIVER SEAT RISER
7. TWELVE ADJUSTABLE SHELVES LOCATED IN COMPARTMENTS PER ORDER
8. ONE FLOOR MOUNTED SLIDE-OUT TRAY LOCATED IN COMPARTMENT PER ORDER
9. ONE VERTICAL PARTITION LOCATED IN COMPARTMENT PER ORDER
10. LIFTING EYE ROPE RESCUE ATTACHMENT AT AERIAL TIP

REV	DATE	BY	CH
1	12MAY25	ANZ	SJS
0	19MAR25	ANZ	SJS

CHASSIS DATA
MAKE: PIERCE
MODEL: ENFORCER

Pierce MANUFACTURING INC.

TITLE: 107' ASCENDANT AERIAL LADDER AND BODY ASSEMBLY
FOR: BEAUFORT FIRE DEPARTMENT, BEAUFORT, SC
DWG NO.: 41053AD

JOB NO.	41053
SCALE 1:24	DATE
DRAWN BY ANZ	25NOV24
CHECKED BY JLO	11DEC24
SHEET SIZE D	SHEET NO. 1 OF 1

View File Created 12-MAY-2025 12:17:35