RIGHT SIDE COMPARTMENTS CONTAIN THE FOLLOWING:

COMPARTMENT RS1 CONTAINS:
- (2) STD DEPTH ADJ SHELVES
- (1) FLOOR MOUNTED TRAY
- (1) VERTICAL COMPARTMENT DIVIDER
- (1) HYDRAULIC TOOL LAZY SUSAN
- (1) TOOL AIR REEL WITH 200' OF HOSE
- (1) 15/20A,120V DUPLEX RECEPTACLE
-
-

COMPARTMENT RS2 CONTAINS:
- (1) SWING OUT TOOL GRID SYSTEM
- (1) 15/20A,120V DUPLEX RECEPTACLE
-
-

COMPARTMENT RS3 CONTAINS:
- (1) VERTICAL COMPARTMENT DIVIDER
- (1) RACK FOR 4 AIR BAGS
- (2) STD DEPTH ADJ SHELVES
- (1) 15/20A,120V DUPLEX RECEPTACLE
-
-
-
-

COMPARTMENT RS4 CONTAINS:
- 5° ANGLE ON COMPARTMENT FLOOR
- (1) HORIZONTAL FLOOR EXTENSION
- (1) VERTICAL COMPARTMENT DIVIDER
- (2) 2-WAY ADJ SHELVES
- (2) 2-WAY FLOOR MOUNTED SLIDE OUT TRAYS WITH TOOLBOARDS
- (1) 15/20A,120V DUPLEX RECEPTACLE
- (2) STOKES BASKET RACKS
- (1) CAB LIFT CONTROLLER

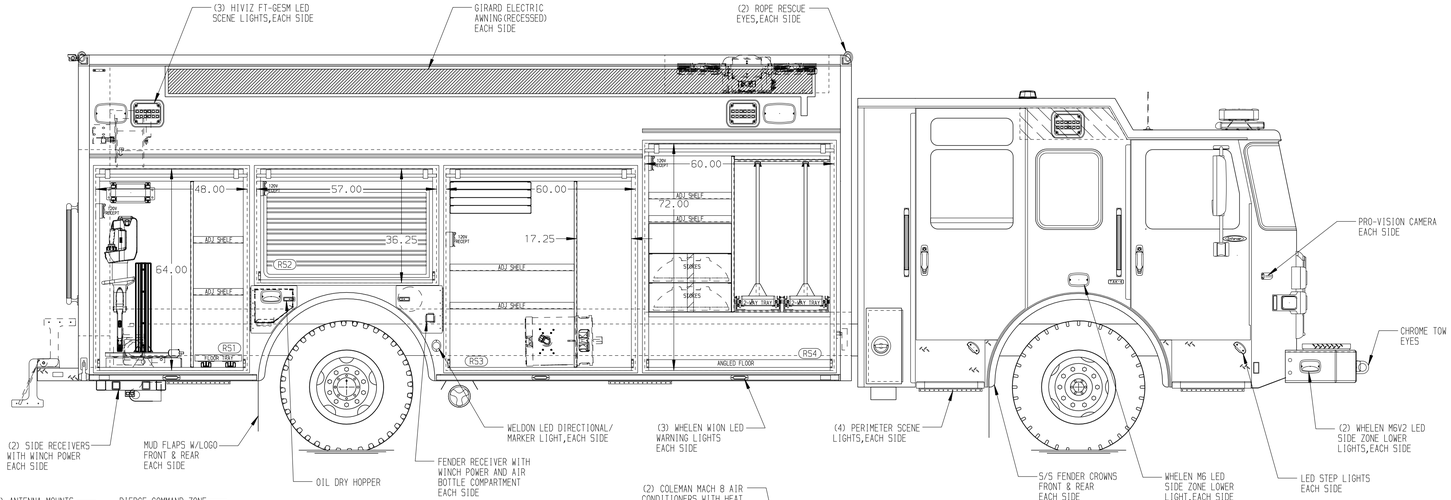

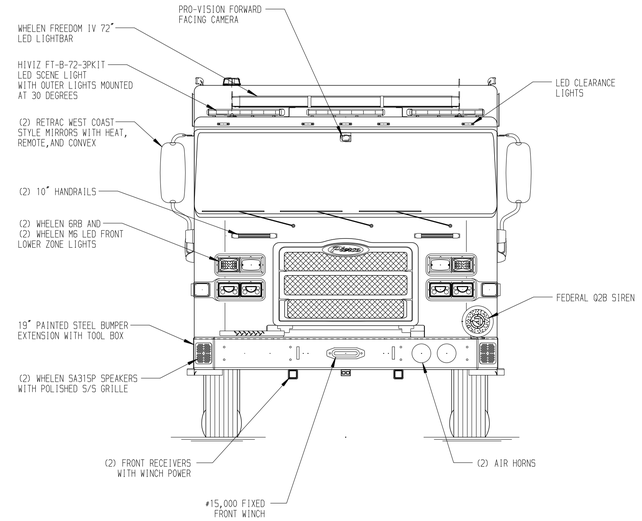

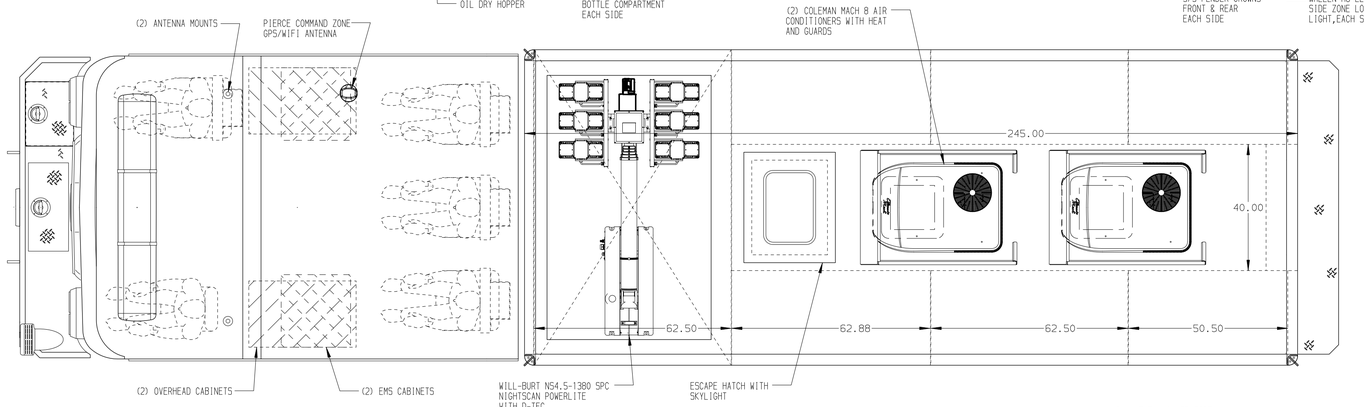

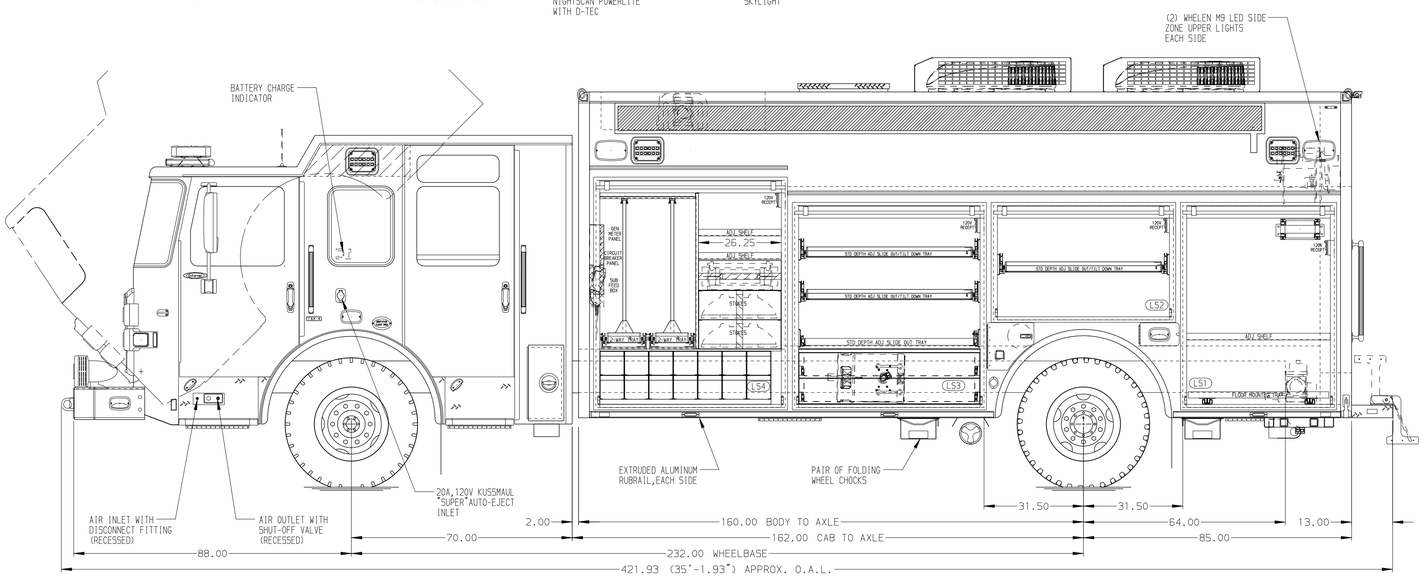

LEFT SIDE COMPARTMENTS CONTAIN THE FOLLOWING:

COMPARTMENT LS1 CONTAINS:
- (1) STD DEPTH ADJ SHELF
- (1) FLOOR MOUNTED TRAY
- (1) 15/20A,120V DUPLEX RECEPTACLE
- (1) ELECTRIC CORD REEL WITH 200' OF 10/3 YELLOW CORD
-

COMPARTMENT LS2 CONTAINS:
- (1) 15/20A,120V DUPLEX RECEPTACLE
- (1) STD DEPTH ADJ SLIDE OUT/TILT TRAY
-
-

COMPARTMENT LS3 CONTAINS:
- (1) STD DEPTH ADJ SLIDE OUT TRAY
- (2) STD DEPTH ADJ SLIDE OUT/TILT TRAYS
- (1) 2-DRAWER CABINET
- (1) 15/20A,120V DUPLEX RECEPTACLE
-
-
-

COMPARTMENT LS4 CONTAINS:
- (1) HORIZONTAL FLOOR EXTENSION
- (1) RACK FOR 14 SCBA BOTTLES
- (1) VERTICAL COMPARTMENT DIVIDER
- (2) 2-WAY ADJ SHELVES
- (2) 2-WAY FLOOR MOUNTED SLIDE OUT TRAYS WITH TOOBOARDS
- (1) CIRCUIT BREAKER PANEL
- (1) GENERATOR METER PANEL
- (1) NIGHTSCAN CONTROLLER
- (1) SUB FEED BOX
- (2) STOKES BASKET RACKS
- (1) LITTLE GIANT LADDER
- (1) 15/20A,120V DUPLEX RECEPTACLE

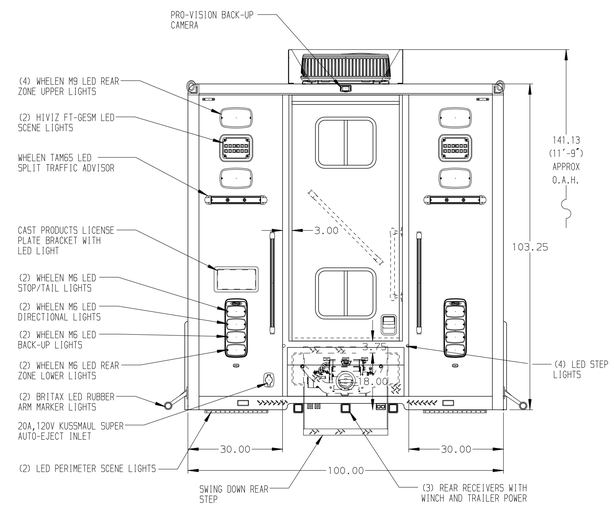

NOTE

DIMENSIONS SHOWN ARE APPROXIMATE AND ARE SUBJECT TO MINOR DEVIATIONS AS MAY OCCUR OR BE NECESSARY IN CONSTRUCTION.
MINOR DETAILS NOT SHOWN.

NOTES:
1. HARRISON 25Kw SINGLE PHASE PTO DRIVEN GENERATORE LOCATED BETWEEN THE FRAME RAILS.
2. RUD AUTOMATIC TIRE CHAINS
3. POLISHED S/S SCUFFPLATES ON CAB AND CREW CAB DOOR JAMBS
4. POLISHED S/S GUARD ON REAR CAB CORNERS
5. PAINTED SHELF BETWEEN THE REAR FACING EMS CABINETS
6. FLOOR IN CAB AND CREW CAB TO BE PADDED RUBBER
7. KUSSMAUL 12 HO CHARGER LOCATED BEHIND THE DRIVER'S SEAT
8. PIERCE LED LIGHTS IN ALL BODY COMPARTMENT

SIDE ROLL PROTECTION

CLEAR DOOR WIDTH KEY	
AMDOR ROLL UP DOORS:	-2 1/4"
GORTITE ROLL UP DOORS:	-2 1/2"
PIERCE DOUBLE LAP DOORS:	-4 1/4"
PIERCE LIFT-UP LAP DOORS:	-1 1/2"
(EX: 60"F-F - 2 1/4"= 57 3/4" CLEAR) (F-F)= FRAME TO FRAME	

REV	DATE	BY	CH
V	16JUL25	DHE	CDK
IV	23APR25	SHD	CDK
V	16APR25	DHE	CDK

CHASSIS DATA: MAKE PIERCE; MODEL EN7010

TITLE: HEAVY DUTY RESCUE WALK-IN

FOR: CITY OF BRENTWOOD EMERGENCY VEHICLE SPECIALISTS — BID #1098 BRADLEY JOHNSON

DWG NO. 41060AD-SH1

Pierce MANUFACTURING INC.

JOB NO.	41060
SCALE	1:24
DRAWN BY	DHE
DATE	21JAN25
CHECKED BY	GFI
DATE	24JAN25
SHEET SIZE	D
SHEET NO.	1 OF 1

View File Created 17-JUL-2025 13:31:59