Pumper, PUC

BODY
Pumper, PUC, Aluminum

CHASSIS
Enforcer Chassis, PUC

CHASSIS

AXLE,FRONT,CUSTOM
19,500 lb TAK-4 Axle

AXLE,REAR
27,000 lb Meritor Axle

ENGINE
510 HP Paccar Engine

TRANSMISSION
Allison 6th Gen, 4000 EVS P

BUMPER
19" Extended Polished Stainless Steel

CAB
7010 Enforcer Cab, PUC

BODY

WATER TANK
750 Gallon Poly Water Tank

COMPT,PUMPER,REAR
33.50" FF Rollup Rear Compt w/Tailboard, PUC

COMPT,PUMPER,LEFT SIDE
189" Rollup Full Height & Depth Front & Rear, PUC

COMPT,PUMPER,RIGHT SIDE
189" Rollup Full Height & Depth Front & Rear, PUC

FIRE SUPPRESSION

PUMPHOUSE
Control Zone, PUC

PUMP
1500 GPM Pierce PUC

CROSSLAYS,1.50"
(2) 1.50", Poly Trays, 200'

CROSSLAYS,2.50"
(1) 2.50", Poly Tray, 200'

GENERATOR
Generator Not Required

Foam System
Husky 12 Single Agent Foam System

Foam Cell
20 Gal Foam Not Reduce Water

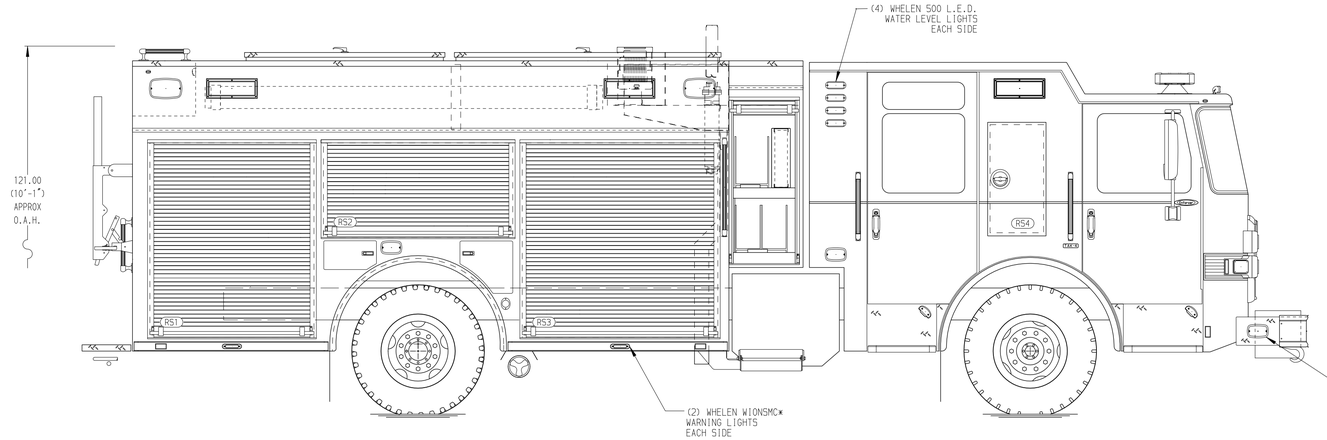

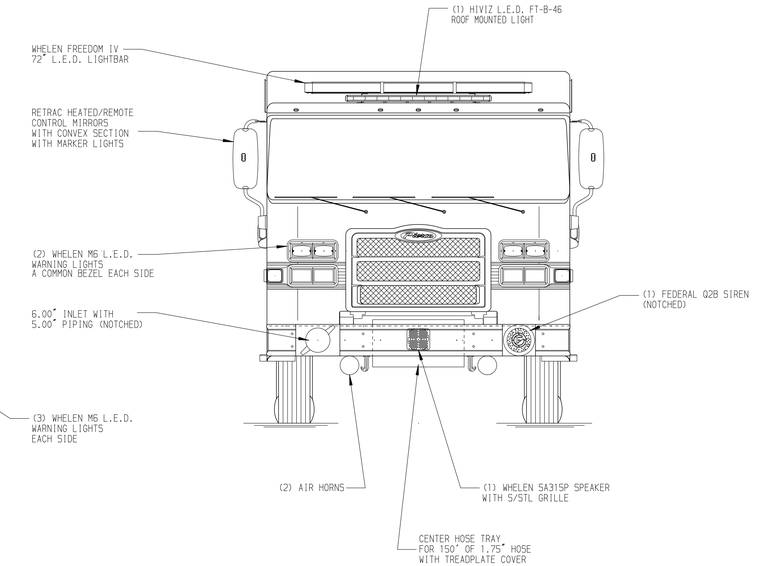

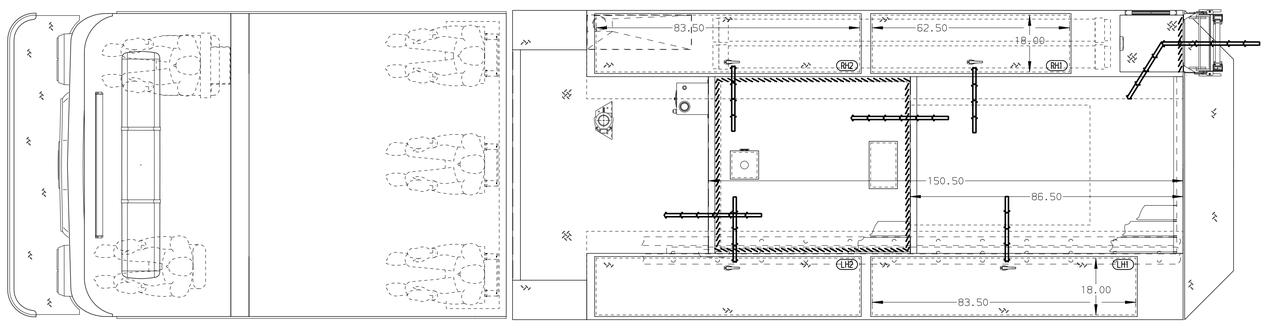

HOSEBED CAPACITY
BED 1
1000' OF 5.00" D.J. POLY HOSE
BED 2
600' OF 2.50" D.J. POLY HOSE

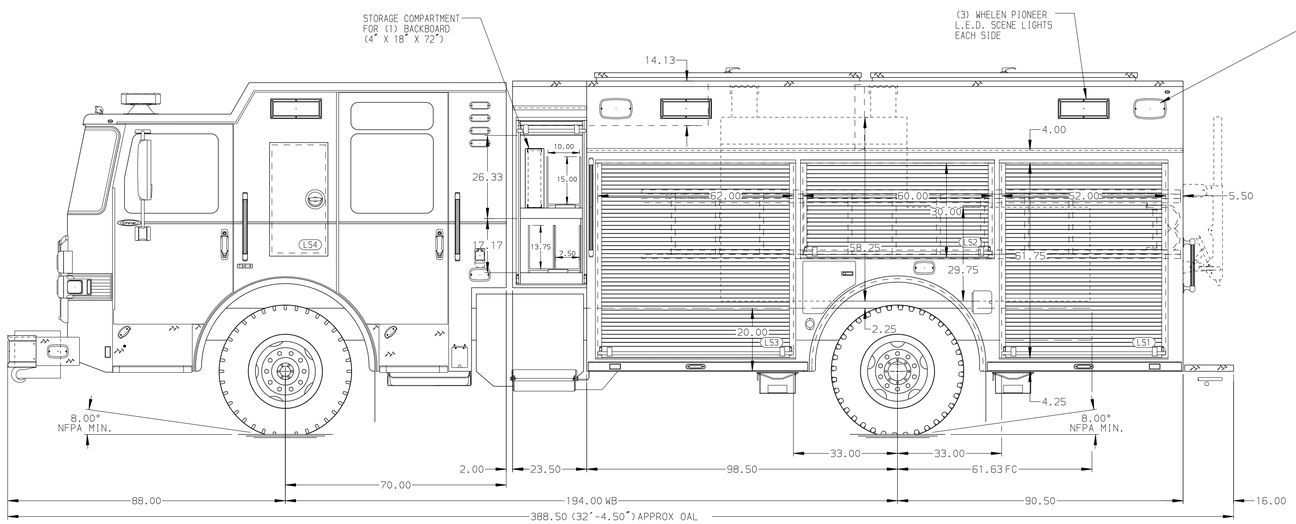

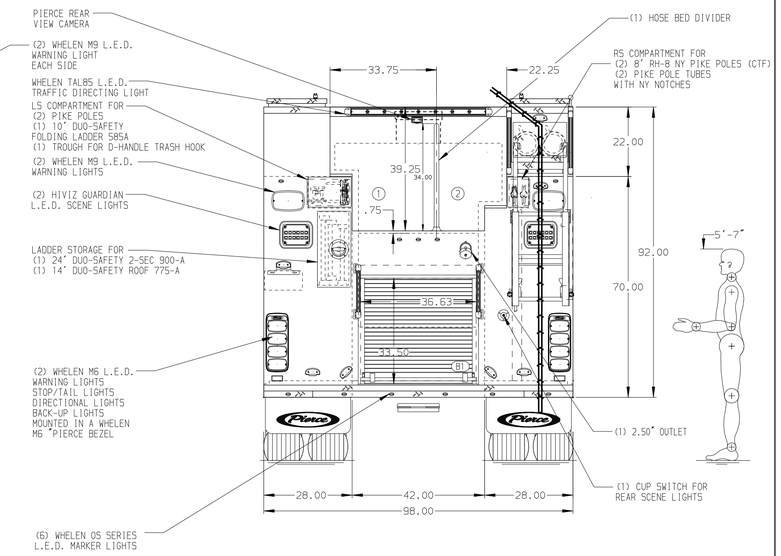

NOTE

DIMENSIONS SHOWN ARE APPROXIMATE AND ARE SUBJECT TO MINOR DEVIATIONS AS MAY OCCUR OR BE NECESSARY IN CONSTRUCTION.
MINOR DETAILS NOT SHOWN.

1. ONE 1.50 OUTLET WITH 2.00 PIPING AND SWIVEL LOCATED IN CENTER BUMPER TRAY
2. KUSSMAUL AUTO EJECT SHORELINE LOCATED BEHIND DRIVER SIDE CREW CAB DOOR
3. AIR INLET WITH DISCONNECT COUPLING IN THE DRIVER SIDE STEPWELL
4. BATTERY CHARGER LOCATED BEHIND THE DRIVER SEAT PER SHOP ORDER
5. BATTERY CHARGE INDICATOR LOCATED ON THE DRIVER SIDE SEAT RISER
6. SIX ADJUSTABLE SHELVES IN COMPARTMENTS PER SHOP ORDER
7. ONE SLID-OUT TRAY IN COMPARTMENT PER SHOP ORDER
8. THREE FLOOR MOUNTED SLIDE-OUT TRAY IN COMPARTMENT PER SHOP ORDER
9. TWO SWING-OUT TOOLBOARDS IN COMPARTMENTS PER SHOP ORDER
10. ONE CTECH TWO DRAWER ASSEMBLY LOCATED PER SHOP ORDER
11. ONE SLIDE-OUT TOOLBOARD LOCATED PER SHOP ORDER
12. THREE POLY TOOL BOXES LOCAITED PER SHOP ORDER
13. PEGBOARD ON BACK WALL PER SHOP ORDER
14. PEGBOARD ON SIDE WALL PER SHOP ORDER
15. OIL DRY HOPPER LOCATED IN HATCH PER SHOP ORDER

REV	DATE	BY	CH
B	14AUG25	BTH	GKH
A	10JUL25	BTH	GKH

CHASSIS DATA	
MAKE	PIERCE
MODEL	ENFORCER

Pierce MANUFACTURING INC.

TITLE	Pierce PUC Pumper Approval Drawing -	JOB NO.	41072
		SCALE	1:24
		DRAWN BY	MMF
		DATE	22MAY25
FOR	Twin Falls Fire Department -	CHECKED BY	AMI
		DATE	22MAY25
DWG NO.	41072AD	SHEET SIZE	D
		SHEET NO.	1 OF 1

View File Created 18-AUG-2025 12:13:46