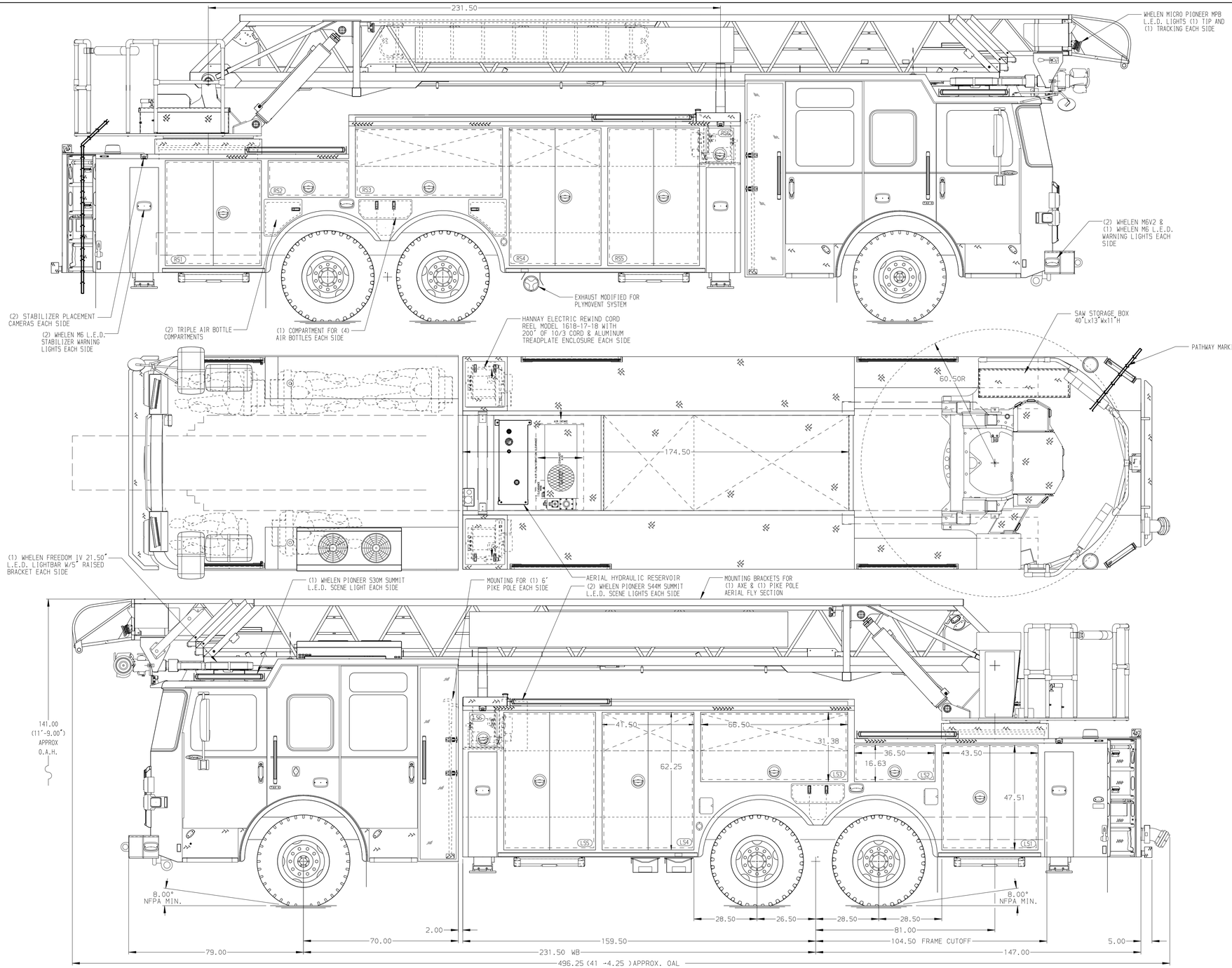

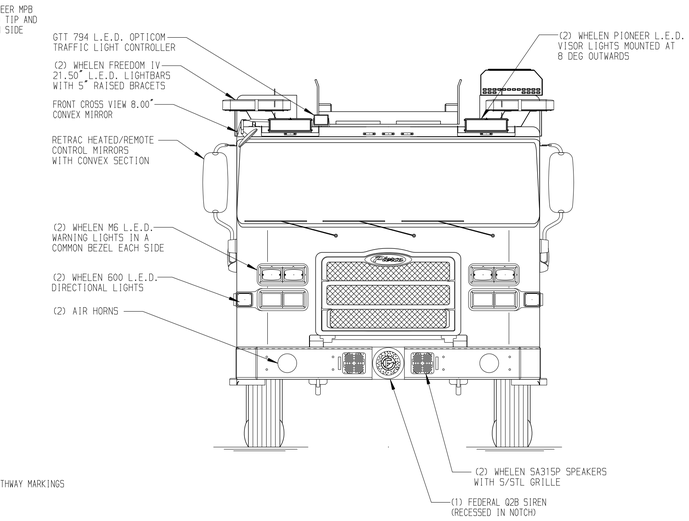

BODY - EXTENDED TORQUE BOX
Aerial, HD Ladder 100',No Pump, Alum Body
COMPT,LEFT SIDE FRONT
FH/FD Lap Forward w/o Chute W/Cord Reel
COMPT,LEFT SIDE REAR
FH/FD Lap Rearward w/Angled Steps
COMPT,RIGHT SIDE FRONT
FH/FD Lap Forward w/o Chute W/Cord Reel
COMPT,RIGHT SIDE REAR
FH/FD Lap Rearward w/Angled Steps

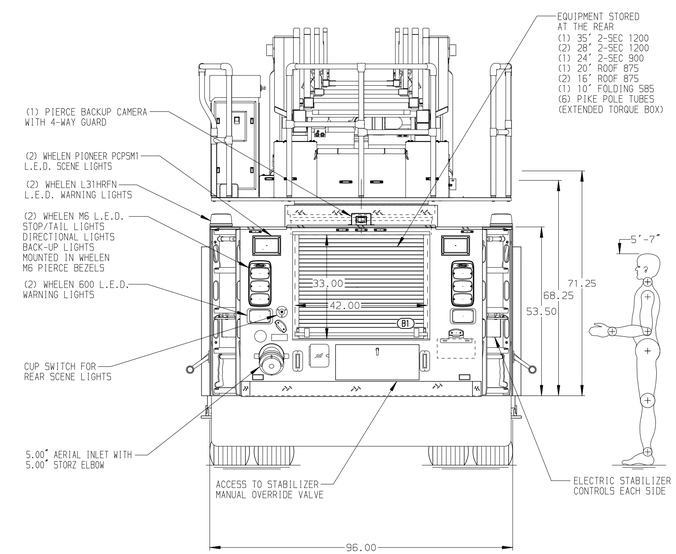

CHASSIS	CAB	AXLE,FRONT,CUSTOM	TRANSMISSION	SAFETY
Enforcer Chassis	7010 Notched Enforcer Cab	22,800 lb TAK-4 Axle	ALLison 6th Gen, 4500 EVS P	Side Roll and Frontal Impact Protection
ENGINE	**BUMPER**	**AXLE,REAR**	**GENERATOR**	
605 HP Cummins X15 Engine	10" Extended Painted Steel	48,000 lb Meritor Axle	Harrison 6kW Hydraulic Generator	

NOTE
DIMENSIONS SHOWN ARE APPROXIMATE AND ARE SUBJECT TO MINOR DEVIATIONS AS MAY OCCUR OR BE NECESSARY IN CONSTRUCTION.
MINOR DETAILS NOT SHOWN.

1. 6.00" AERIAL LIMITED RETRACTION REQUIRED
2. SHORELINE RECEPTACLE WITH KUSSMAUL SUPER AUTO-EJECT LOCATED ON DRIVER SIDE OF THE CAB
3. AIR INLET WITH DISCONNECT COUPLING IN THE DRIVER SIDE STEPWELL
4. BATTERY CHARGER LOCATED BEHIND DRIVER SEAT
5. BATTERY CHARGE INDICATOR LOCATED PER ORDER
6. SIXTEEN ADJUSTABLE SHELVES LOCATED IN COMPARTMENTS PER ORDER
7. ONE FLOOR MOUNTED SLIDE-OUT TRAY LOCATED PER ORDER
8. 3.00" RAISED AERIAL PEDESTAL
9. LIFTING EYE ROPE RESCUE ATTACHMENT AT AERIAL TIP
10. TWO INCLONOMETERS LOCATED IN CAB
11. SIX POLY TOOL BOXES LOCATED IN COMPARTMENTS PER ORDER
12. TWO VERTICAL PARTITIONS LOCATED IN COMPARTMENTS PER ORDER
13. DRI-DECK MATTING LOCATED ON COMPARTMENT SHELVES, TRAYS & FLOORS PER ORDER
14. ONE RECEPTACLE STRIP LOCATED PER ORDER
15. THREE RECEPTACLES LOCATED PER ORDER
16. MOUNTING BRACKETS FOR 10" 7750R DUO-SAFETY LADDER ON RIGHT SIDE AERIAL BASE SECTION
17. TECNIQ 4-SECTION RUNG LIGHTING AT AERIAL DEVICE
18. ONE COMPARTMENT WITH STAINLESS STEEL FLOORS & WALLS PER ORDER
19. ONE CIRCUIT BREAKER PANEL LOCATED IN COMPARTMENT PER ORDER

REV	DATE	BY	CH
V	29JUL25	ANZ	CSH
V	01APR25	ANZ	CSH
V	17MAR25	ANZ	CSH
V	31JAN25	ANZ	CSH
V	27JAN25	ANZ	CSH

CHASSIS DATA
MAKE: PIERCE
MODEL: ENFORCER

Pierce MANUFACTURING INC.

TITLE: 100' AERIAL LADDER AND BODY ASSEMBLY
NO PUMP/NO TANK
FOR: CITY OF BRISTOL
BRISTOL, CT
DWG NO. 41081AD

JOB NO.	41081
SCALE 1:24	DATE
DRAWN BY ANZ	03DEC24
CHECKED BY JLO	09DEC24
SHEET SIZE D	SHEET NO. 1 OF 1

View File Created 29-JUL-2025 07:57:53