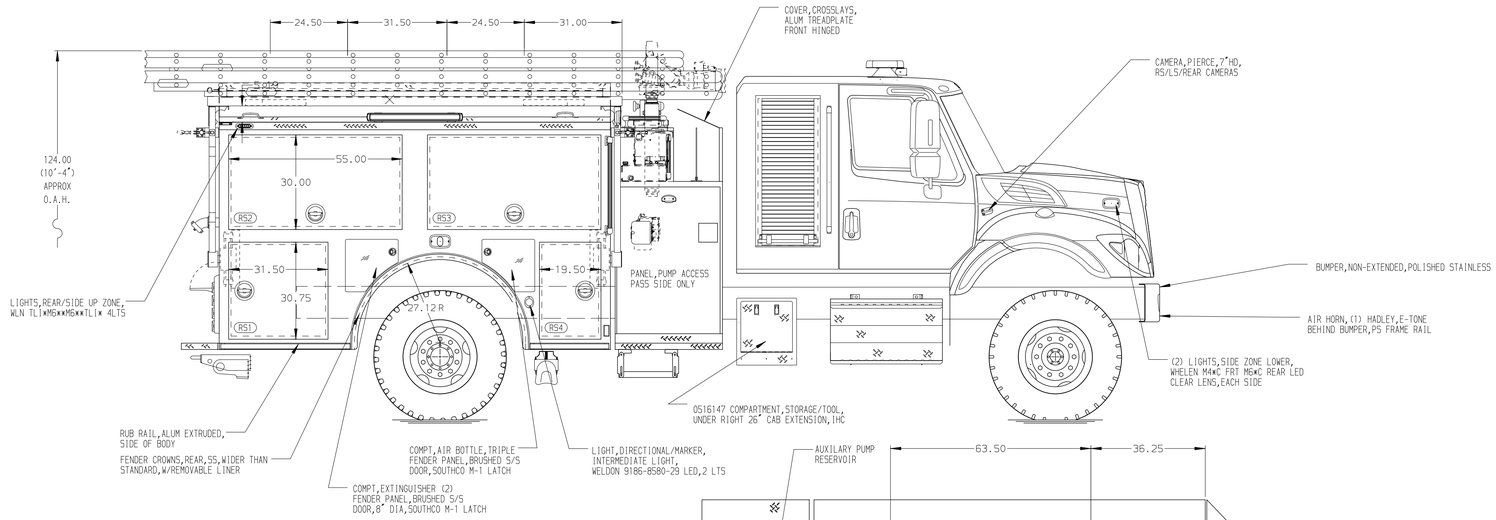

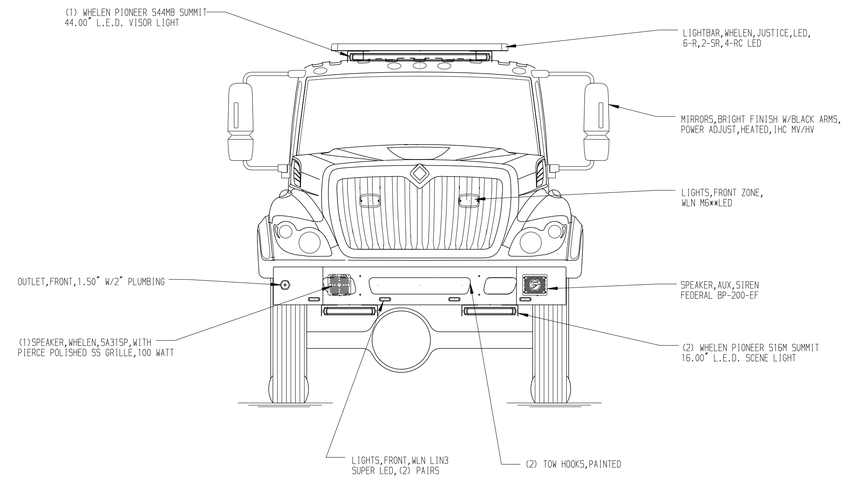

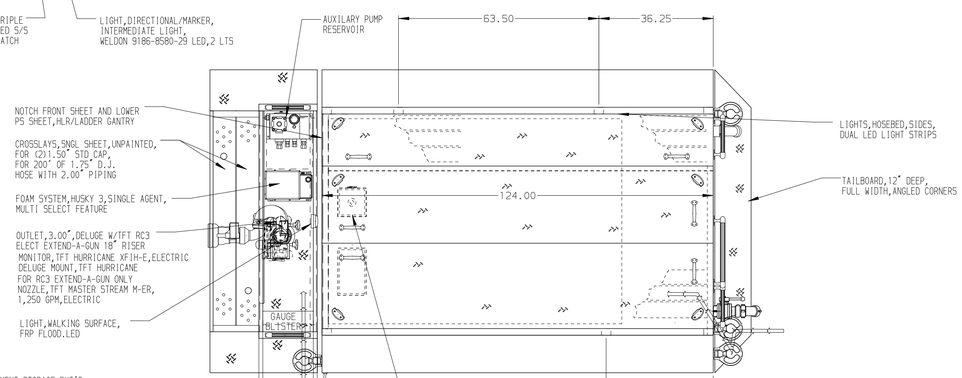

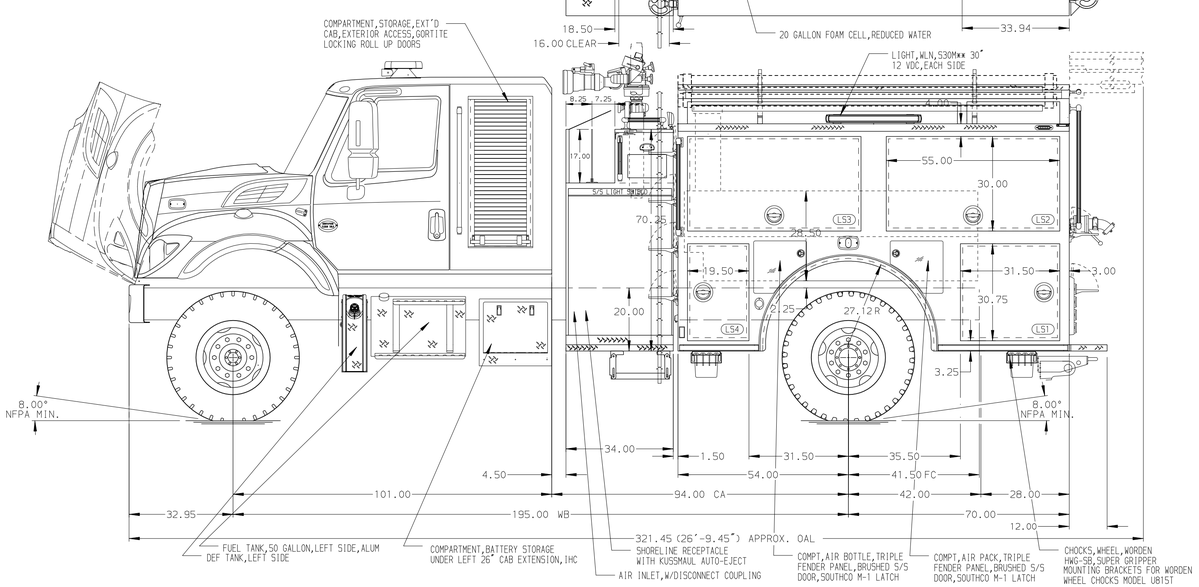

HOSEBED CAPACITIES

1. 100' OF 1.75" D.J. POLY HOSE
2. 800' OF 3.00" D.J. POLY HOSE
3. 800' OF 3.00" D.J. POLY HOSE
4. OPEN
5. 400' OF 2.50" D.J. POLY HOSE

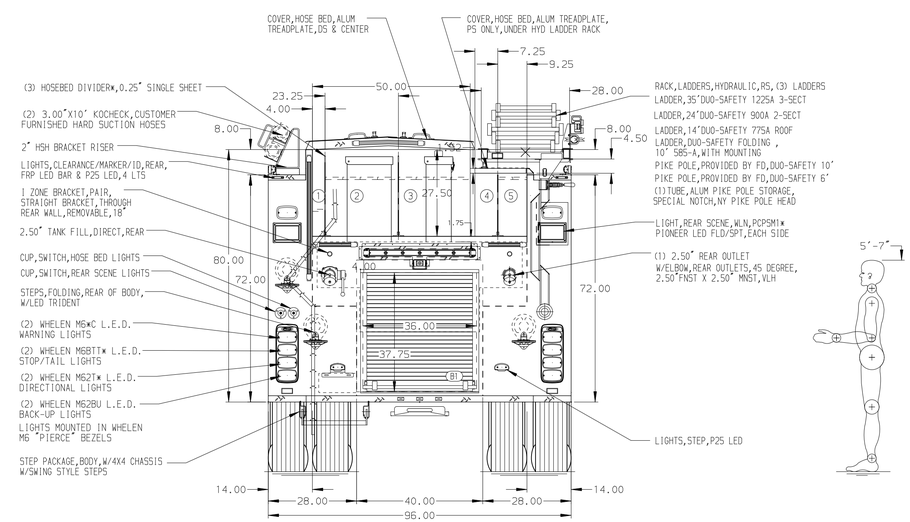

ALUMINUM BODY

MAXIMUM O.A.L. 27'=324.00"

MAXIMUM O.A.H. 10'4"=124.00"

NOTE

DIMENSIONS SHOWN ARE APPROXIMATE
AND ARE SUBJECT TO MINOR DEVIATIONS
AS MAY OCCUR OR BE NECESSARY IN
CONSTRUCTION.
MINOR DETAILS NOT SHOWN.

REV	DATE	BY	CH
V	27SEP25	RHU	CCS
V	23JUL25	ADP	CCS
V	28APR25	RHU	CCS
V	07MAR25	RHU	AJA

CHASSIS DATA

MAKE: IHC

MODEL: HV-507 4X4

Pierce MANUFACTURING INC.

TITLE: 1000-D-500G WATER TANK,480 W/20 F,124"PUMPER BODY
34" SIDE CONTROL,(2) 1.50" CROSSLAYS

FOR: SOUTH LAKE COUNTY FIRE PROTECTION DISTRICT
MIDDLETOWN,CA

DWG NO.: 41084AD

JOB NO.	41084
SCALE 1:24	DATE
DRAWN BY RHU	25FEB25
CHECKED BY AJA	26FEB25
SHEET SIZE D	SHEET NO. 1 OF 1

View File Created 29-SEP-2025 07:31:15