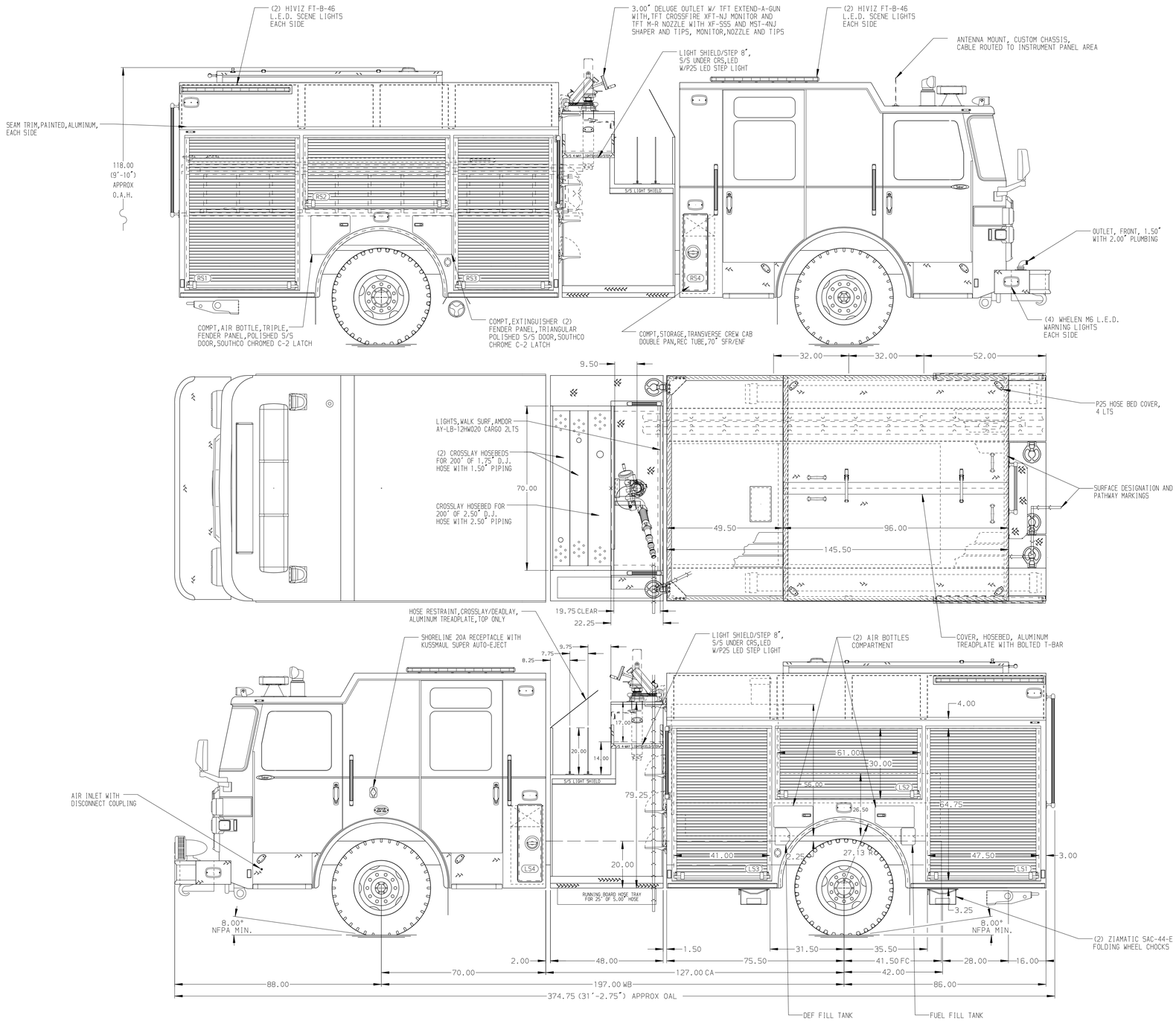

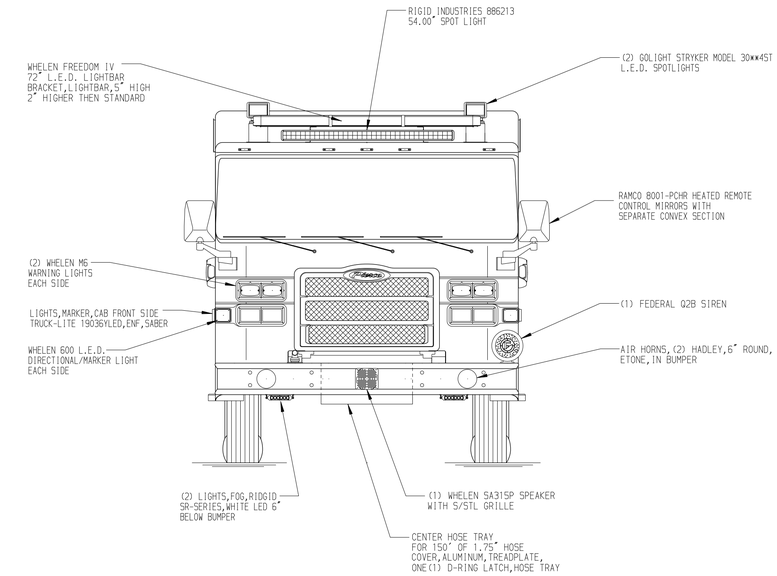

HOSEBED CAPACITIES

1. 300' OF 1.75" D.J. POLY HOSE
2. 300' OF 2.50" D.J. POLY HOSE
3. 1000' OF 5.00" D.J. POLY HOSE
4. 200' OF 1.75" D.J. POLY HOSE
5. 200' OF 3.00" D.J. POLY HOSE

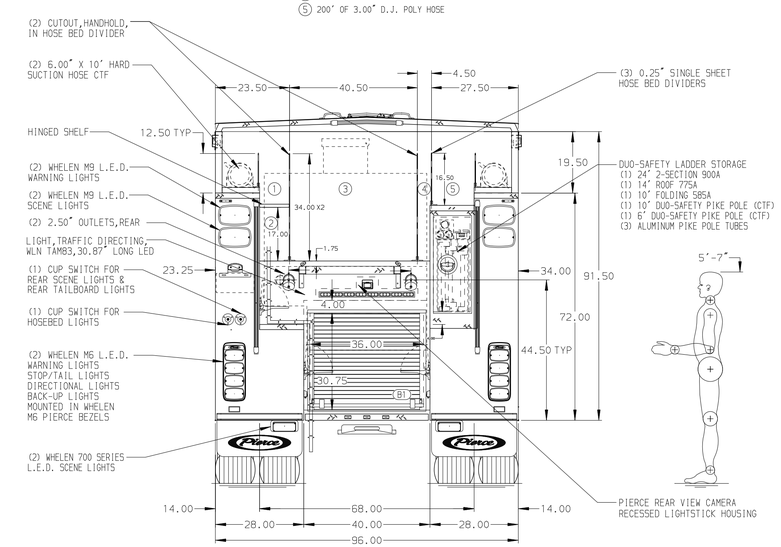

ALUMINUM BODY

SIDE ROLL AND FRONTAL IMPACT PROTECTION

NOTE

DIMENSIONS SHOWN ARE APPROXIMATE AND ARE SUBJECT TO MINOR DEVIATIONS AS MAY OCCUR OR BE NECESSARY IN CONSTRUCTION.
MINOR DETAILS NOT SHOWN.

1. BATTERY CHARGER, IOTA, MODEL DL5-75 WITH IQ4 CONTROLLER, LOCATED FRONT LEFT SIDE BODY COMPARTMENT, HIGH ON LEFT WALL
2. BATTERY CHARGER INDICATOR, KUSSMAUL 091-94-12, LOCATED ON DRIVER'S SEAT RISER

REV	DATE	BY	CH
V	15JUL25	VHO	MAR
B	04APR25	ADP	EEM
A	06MAR25	JDA	CDU

CHASSIS DATA
MAKE: PIERCE
MODEL: SABER FR

Pierce MANUFACTURING INC.

TITLE: 1500-D-750P, 750G WATER, 161"PUMPER BODY
48"SIDE CONTROL,(3) CROSSLAYS, 3" DELUGE

FOR: PADUCAH FIRE DEPARTMENT
PADUCAH, KENTUCKY

DWG NO.: 41129AD

JOB NO.	41129
SCALE	1:24
DATE	
DRAWN BY	JDA 10FEB25
CHECKED BY	CDU 11FEB25
SHEET SIZE	D
SHEET NO.	1 OF 1

View File Created 16-JUL-2025 07:11:03