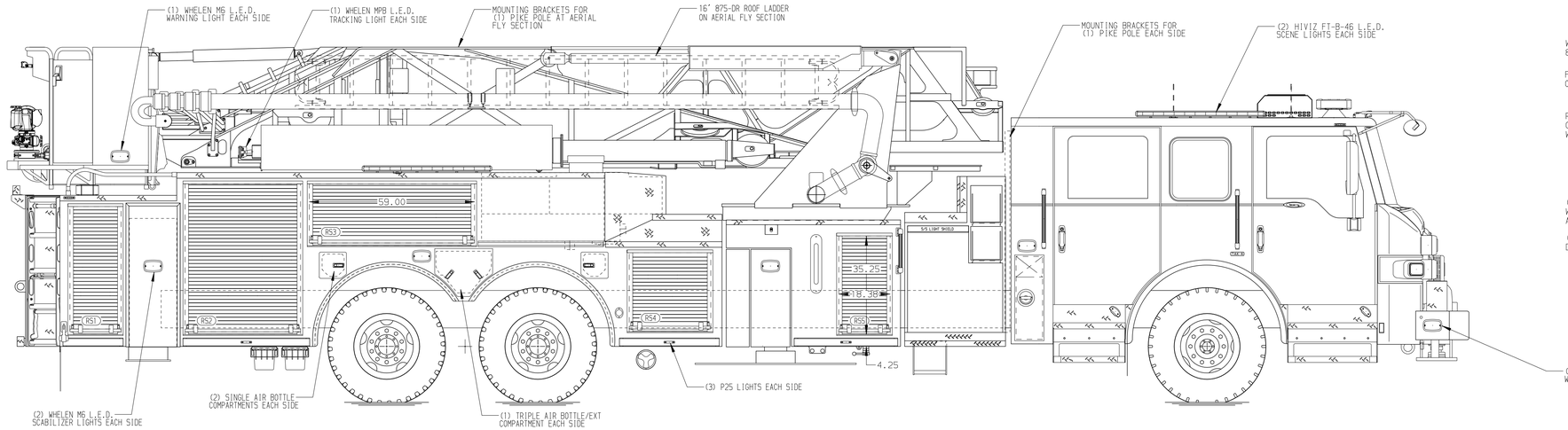

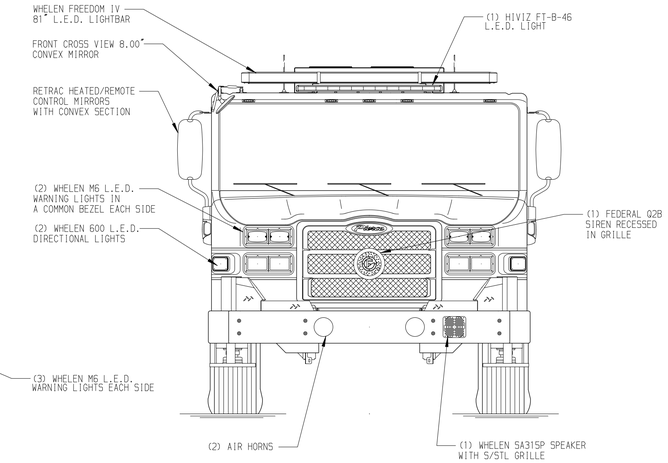

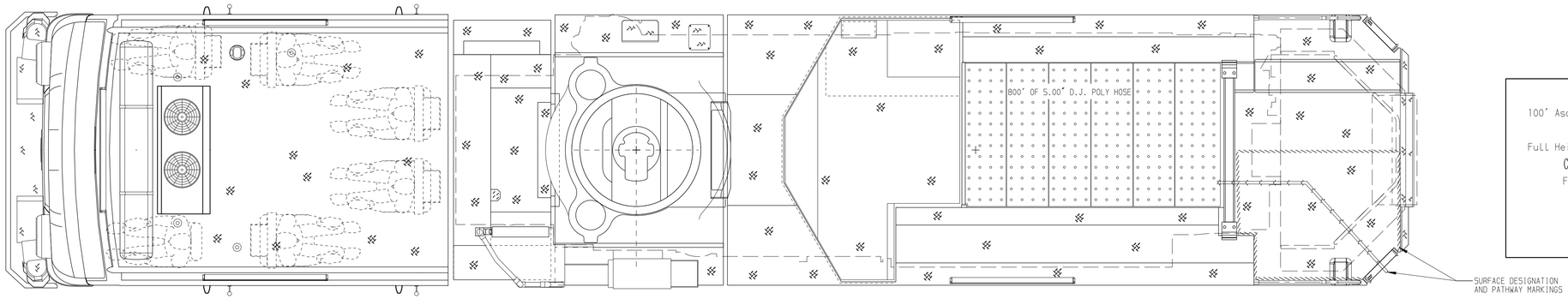

BODY	TOTAL TANK CAPACITY
100' Ascendant Aerial Tower Alum Body	300 Gallon Poly Tank
COMPT,LEFT SIDE	WATER CAPACITY
Full Height & Full Depth Rollup Doors	300 Gallons of Water
COMPT,RIGHT SIDE	FOAM CELL CAPACITY
Full Height Rollup Doors	Foam Cell Not Required
	FOAM SYSTEM
	Foam System Not Required

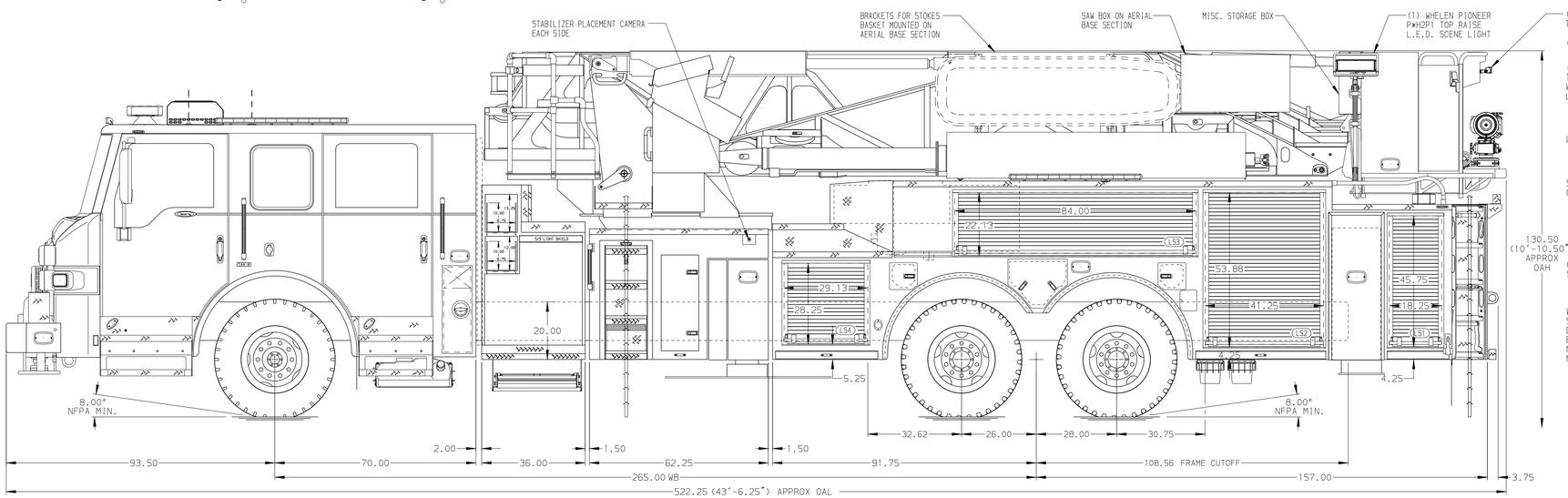

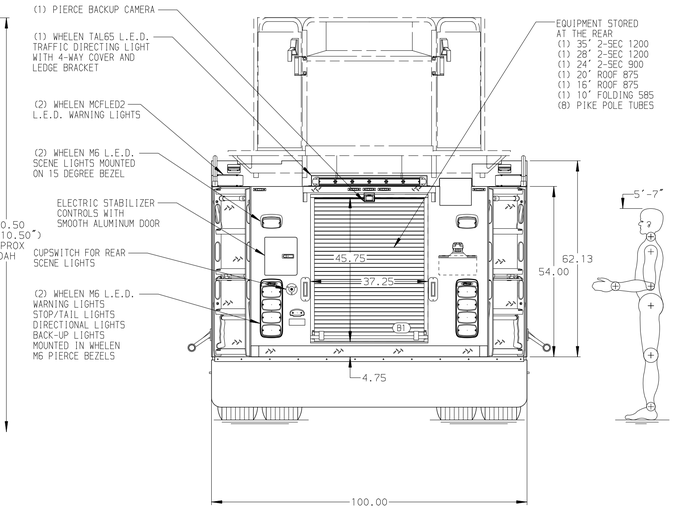

CHASSIS	CAB	ELECTRICAL SYSTEM	AXLE,FRONT,CUSTOM	PUMPHOUSE	CROSSLAYS,1.50"	SPEEDLAYS	SAFETY
Velocity Chassis (Big Block)	7000 Velocity FR Cab	MUX	24,000 Lb TAK-4 Axle	36" Control Zone Side Mount	(2) 1.50",With Trays,200"	Speedlays Not Required	Side Roll and Frontal Impact Protection
ENGINE	BUMPER	TRANSMISSION	AXLE,REAR	PUMP	CROSSLAYS,2.50"	GENERATOR	
510 HP Paccar MX13 Engine	15" Polished Stainless Steel	Allison 6th Gen, 4000 EVS P	54,000 Lb Meritor Axle	2000 GPM Waterous ESU1	2.50" Crosslay Not Required	Generator Not Required	

NOTE

DIMENSIONS SHOWN ARE APPROXIMATE AND ARE SUBJECT TO MINOR DEVIATIONS AS MAY OCCUR OR BE NECESSARY IN CONSTRUCTION.
MINOR DETAILS NOT SHOWN.

1. SHORELINE RECEPTACLE WITH KUSSMAUL SUPER AUTO-EJECT LOCATED ON DRIVER SIDE OF CAB
2. AIR INLET WITH DISCONNECT COUPLING IN THE DRIVER SIDE STEPWELL
3. BATTERY CHARGER LOCATED PER ORDER
4. BATTERY CHARGE INDICATOR LOCATED PER ORDER
5. THREE ADJUSTABLE SHELVES LOCATED IN COMPARTMENTS PER ORDER
6. FOUR FLOOR MOUNTED SLIDE-OUT TRAYS LOCATED IN COMPARTMENTS PER ORDER
7. 3-in-1 LYFECOMBO BRACKETS AT AERIAL BASKET
8. ONE CTECH THREE-DRAWER CABINET LOCATED IN COMPARTMENT PER ORDER
9. ONE SWING-OUT TOOLBOARD LOCATED IN COMPARTMENT PER ORDER
10. ONE TOOLBOARD ADDED TO SLIDE-OUT TRAY PER ORDER
11. TWO HIVIZ FT-MB-2.9 L.E.D. LIGHTS UNDER BASKET CORNER STEPS
12. ONE PAC TRAC MOUNTING SYSTEM LOCATED ON COMPARTMENT BACK WALL PER ORDER
13. KLEINN 730 TRAIN HORN LOCATED FORWARD UNDER LEFT SIDE OF CAB
14. SIX RECEPTACLE STRIPS LOCATED PER ORDER
15. TECNIQ 5-SECTION RUNG LIGHTING AT AERIAL DEVICE
16. DC POWER TO AERIAL TIP

REV	DATE	BY	CH
2	22APR25	ANZ	JKR
1	17MAR25	ANZ	JKR

CHASSIS DATA
MAKE: PIERCE
MODEL: VELOCITY

Pierce MANUFACTURING INC.

TITLE: 100' ASCENDANT AERIAL TOWER AND BODY ASSEMBLY
–
FOR: TOWNSHIP OF PEQUANNOCK
POMPTON PLAINS, NJ
DWG NO.: 41130AD

JOB NO.	41130
SCALE 1:24	DATE
DRAWN BY ANZ	16JAN25
CHECKED BY JLO	23JAN25
SHEET SIZE D	SHEET NO. 1 OF 1

View File Created 22-APR-2025 14:27:22