# PUMPER

## BODY
Long Aluminum 2nd Gen Pumper

## CHASSIS
Enforcer Chassis

## ELECTRICAL SYSTEM
Hard Wired

# CHASSIS

## AXLE, FRONT, CUSTOM
22,800 Lb TAK-4 Axle

## AXLE, REAR
27,000 Lb Dana Axle

## ENGINE
510 HP Paccar MX13 Engine

## TRANSMISSION
ALLison 6th Gen, 4000 EVS P

## BUMPER
22" Extended Painted Steel

## CAB
7000 Enforcer Cab

# BODY

## TOTAL TANK CAPACITY
790 Gallon New York Style Poly Tank

## WATER CAPACITY
750 Gallons of Water

## FOAM CELL CAPACITY
40 Gallon Foam Cell

## COMPT, PUMPER, REAR
30.75" FF Lap Rear Compt

## COMPT, PUMPER, LEFT SIDE
161" Lap Full Height Front & Rear FDLER

## COMPT, PUMPER, RIGHT SIDE
161" Lap Low FDLER

# FIRE SUPPRESSION

## PUMPHOUSE
45" Control Zone Side Mount

## PUMP
2000 GPM Waterous CSU

## CROSSLAYS, 1.50"
1.50" Crosslays Not Required

## CROSSLAYS, 2.50"
2.50" Crosslay Not Required

## SPEEDLAYS
Speedlays Not Required

## GENERATOR
Generator Not Required

## FOAM SYSTEM
Husky 3 Single Agent Foam System

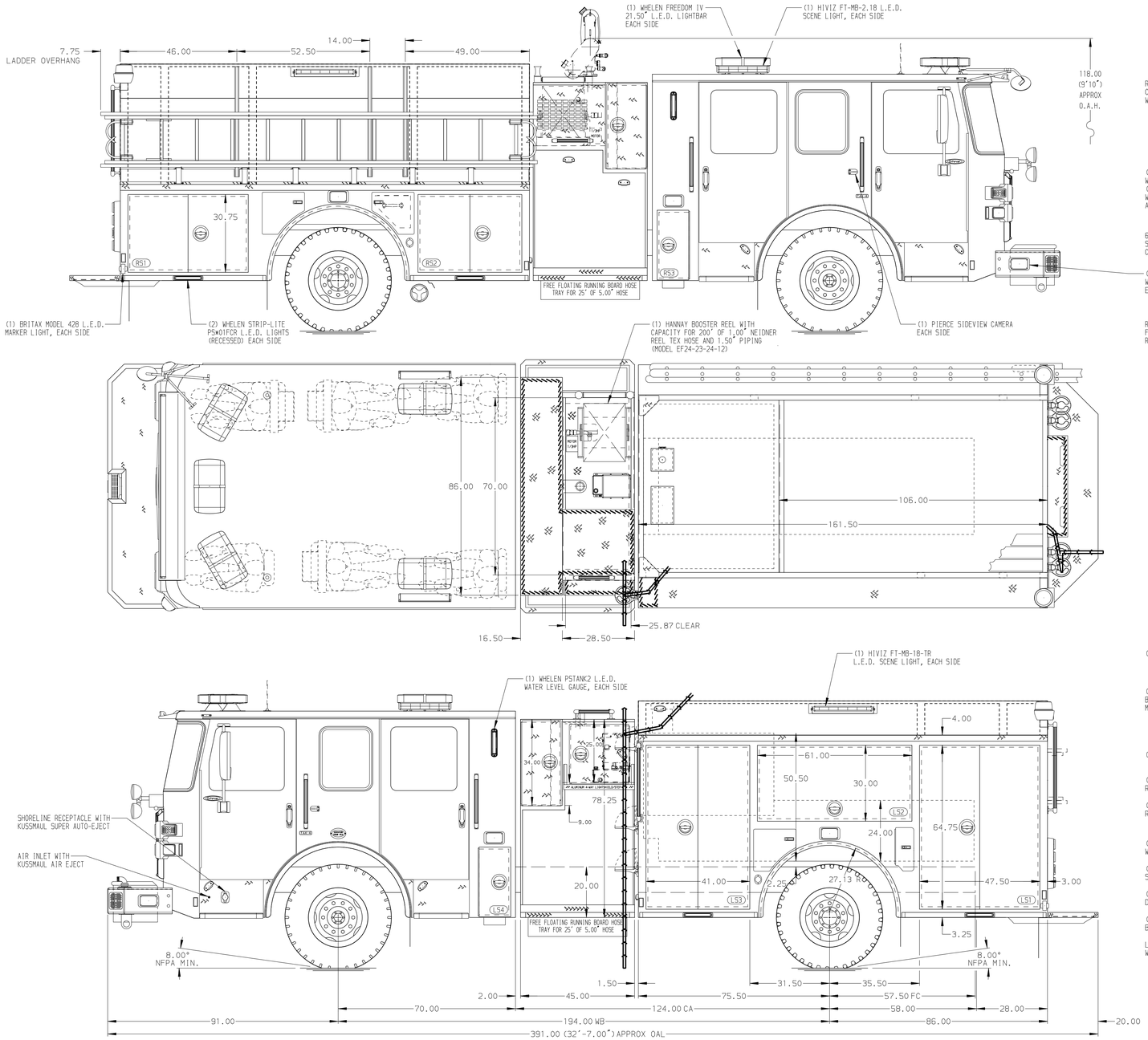


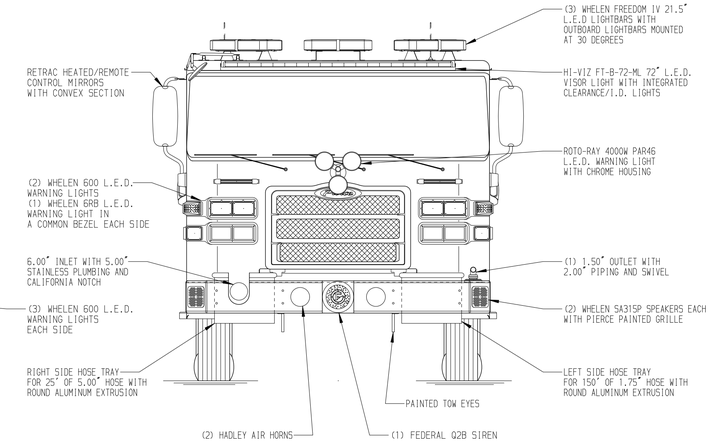


HOSEBED CAPACITIES

1. 200' OF 1.75" D.J. POLY HOSE
2. 200' OF 2.50" D.J. POLY HOSE
3. 1200' OF 5.00" D.J. POLY HOSE
4. 400' OF 3.00" D.J. POLY HOSE
5. 300' OF 2.50" D.J. POLY HOSE
6. 200' OF 1.75" D.J. POLY HOSE

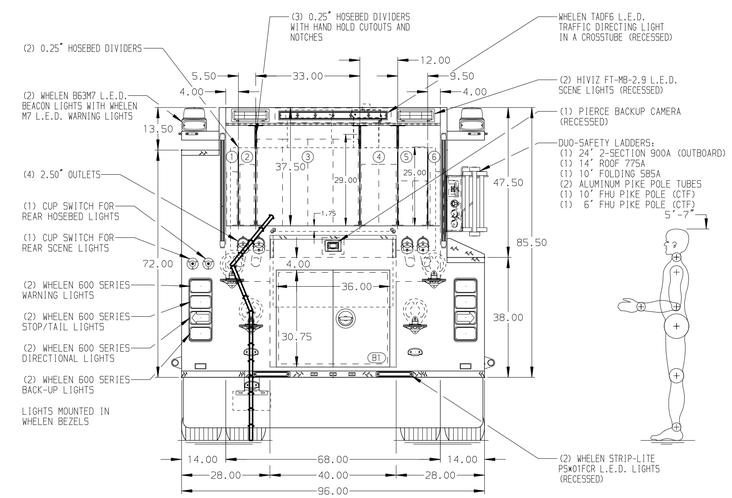


NOTE

DIMENSIONS SHOWN ARE APPROXIMATE AND ARE SUBJECT TO MINOR DEVIATIONS AS MAY OCCUR OR BE NECESSARY IN CONSTRUCTION.
MINOR DETAILS NOT SHOWN.

1. DUAL L.E.D. LIGHT STRIPS LOCATED IN HOSE BED
2. L.E.D. LIGHT STRIP LOCATED ON THE FRONT OF THE HOSEBED
3. WHEEL CHOCKS AND MOUNTING TO BE PROVIDED BY CUSTOMER
4. BATTERY CHARGER LOCATED PER ORDER
5. BATTERY CHARGE INDICATOR LOCATED ON DRIVER SEAT RISER
6. TRAFFIC CONE MOUNTING TO BE SHIPPED LOOSE
7. PARTITION BETWEEN COMPARTMENTS LS1/B1 AND RS1/B1
8. FIVE FULL WIDTH/DEPTH ADJUSTABLE SHELVES LOCATED PER ORDER
9. TWO FLOOR MOUNTED SLIDE-OUT TRAYS LOCATED PER ORDER
10. ONE SWING-OUT ALUMINUM TOOL BOARD LOCATED PER ORDER
11. ONE CTECH THREE DRAWER INSERT LOCATED PER ORDER
12. SIX VERTICAL EQUIPMENT MOUNTING TRACKS LOCATED PER ORDER
13. TWO ALUMINUM MOUNTING PLATES LOCATED PER ORDER
14. AMDOR WALKING SURFACE LIGHTS TO BE PROVIDED IN CARGO AREAS

| REV | DATE | BY | CH |
|---|---|---|---|
| 7 | 01DEC25 | JDA | JGO |
| 6 | 03SEP25 | JDA | JGO |
| 5 | 25JUL25 | JDA | JGO |

CHASSIS DATA
MAKE: PIERCE
MODEL: ENFORCER

Pierce MANUFACTURING INC.

TITLE: Pierce Pumper Approval Drawing
–
FOR: Greer Fire Department
–
DWG NO.: 41136AD

| | |
|---|---|
| JOB NO. | 41136 01-02 |
| SCALE | 1:24 |
| DATE | |
| DRAWN BY | JDA 03JUN25 |
| CHECKED BY | MMF 04JUN25 |
| SHEET SIZE | D |
| SHEET NO. | 1 OF 1 |

View File Created 08-DEC-2025 07:29:39