RIGHT SIDE COMPARTMENTS CONTAIN THE FOLLOWING:

COMPARTMENT RS1 CONTAINS:
- (1) STD DEPTH ADJ SHELF
- (2) STD DEPTH ADJ SLIDE OUT/TILT TRAYS
- (2) STD DEPTH ADJ SLIDE OUT TOOLBOARDS
- (1) VERTICAL COMPARTMENT DIVIDER
- (2) POLY TOOL BOXES
-
-

COMPARTMENT RS2 CONTAINS:
- (1) 1/2 DEPTH ADJ SLIDE OUT/TILT TRAY
- (1) 2-WAY FLOOR MTD SLIDE OUT TRAY
- (2) 2-WAY ADJ SLIDE OUT TOOLBOARDS
- (1) VERTICAL COMPARTMENT DIVIDER
- PEGBOARD ON RIGHT WALL

COMPARTMENT RS3 CONTAINS:
- (1) STD DEPTH ADJ SHELF
- (1) STD DEPTH ADJ SLIDE OUT/TILT TRAY
- (1) ELECTRIC CORD REEL W/200' OF 10/3 YELLOW CORD
- (1) JUNCTION BOX HOLDER
-
-
-

COMPARTMENT RS4 CONTAINS:
- (1) CAB LIFT CONTROLLER
- (1) STD DEPTH ADJ SHELF
- (1) STD DEPTH ADJ SLIDE OUT/TILT TRAY
- (1) FLOOR MOUNTED TRAY W/SIDE SLIDES
-
-
-

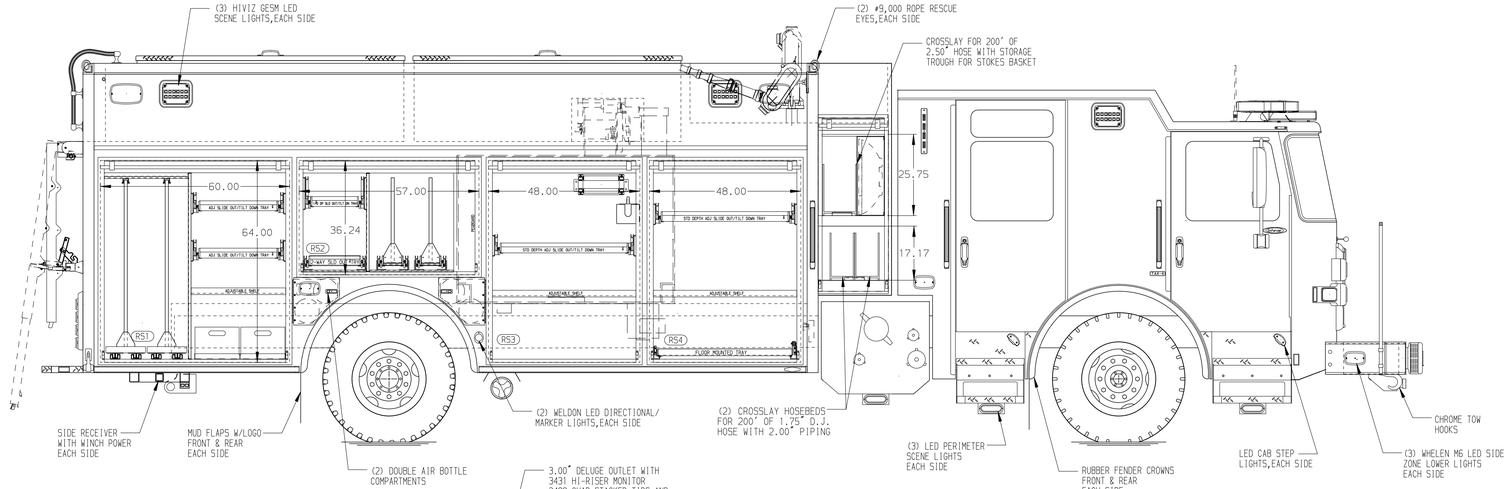

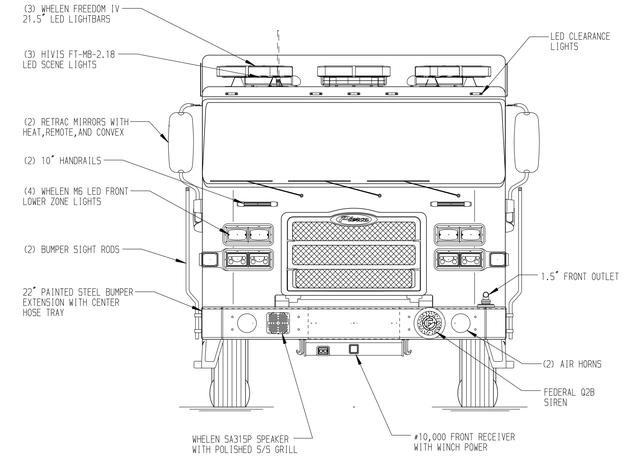

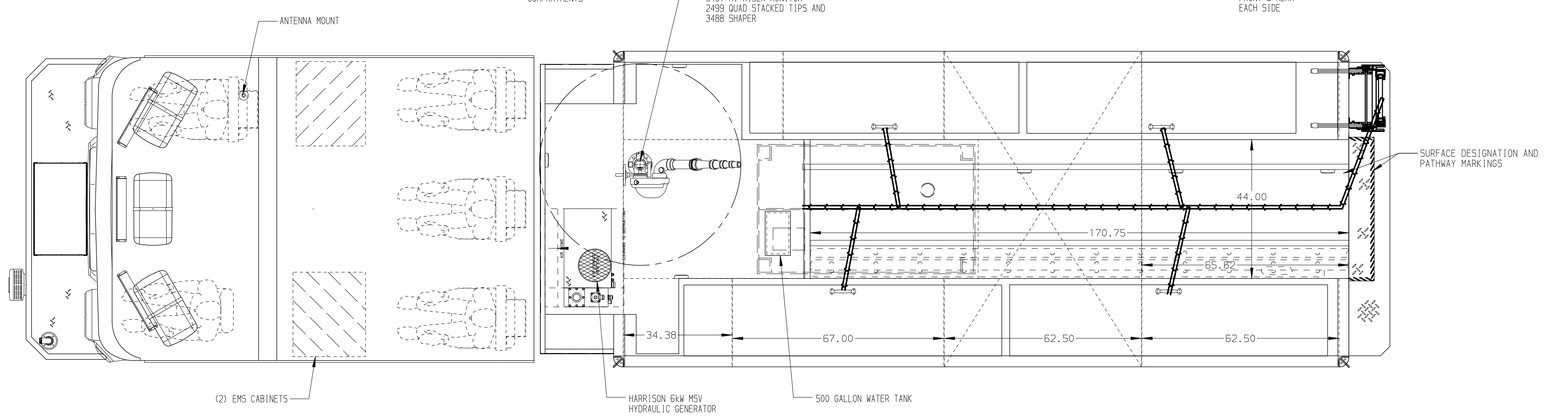

REAR COMPARTMENT CONTAINS THE FOLLOWING:

COMPARTMENT B1 CONTAINS:
- (1) 60" DEEP ADJ SLIDE OUT TRAY
- (1) 60" DEEP ADJ SLIDE OUT/TILT TRAY
- (1) FLOOR MOUNTED TRAY W/SIDE SLIDES
-
-

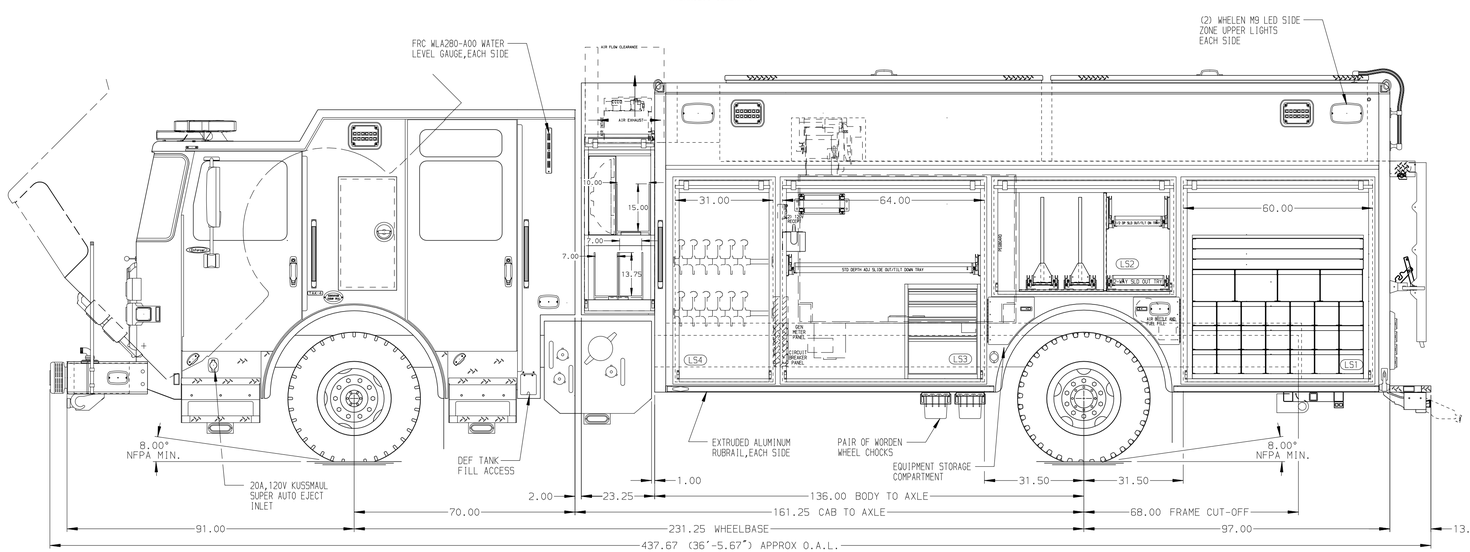

LEFT SIDE COMPARTMENTS CONTAIN THE FOLLOWING:

COMPARTMENT LS1 CONTAINS:
- 1" LIP ON TOP OF AIR BAG RACK
- (1) RACK FOR 4 EXTINGUISHERS
- (1) RACK FOR 3 AIR BAGS
- (1) RACK FOR 21 SCBA BOTTLES
-
-
-

COMPARTMENT LS2 CONTAINS:
- (1) 1/2 DEPTH ADJ SLIDE OUT/TILT TRAY
- (1) 2-WAY FLOOR MTD SLIDE OUT TRAY
- (2) 2-WAY ADJ SLIDE OUT TOOLBOARDS
- (1) VERTICAL COMPARTMENT DIVIDER
- PEGBOARD ON LEFT WALL

COMPARTMENT LS3 CONTAINS:
- (1) STD DEPTH ADJ SLIDE OUT/TILT TRAY
- (1) 4-DRAWER C-TECH CABINET
- (1) CIRCUIT BREAKER PANEL
- (1) GENERATOR METER PANEL
- (1) ELECTRIC CORD REEL W/200' OF 10/3 YELLOW CORD
- (1) JUNCTION BOX HOLDER
- (2) 15/20A,120V DUPLEX RECEPTACLE
-

COMPARTMENT LS4 CONTAINS:
-
-
-
-
-

HOSEBED CAPACITY
(A) - 300' OF 4.00" HOSE

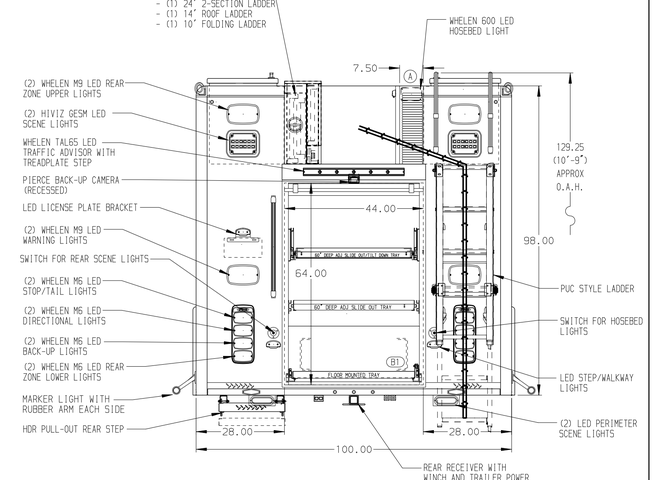

NOTE

DIMENSIONS SHOWN ARE APPROXIMATE AND ARE SUBJECT TO MINOR DEVIATIONS AS MAY OCCUR OR BE NECESSARY IN CONSTRUCTION.
MINOR DETAILS NOT SHOWN.

NOTES:
1. PIERCE 1500 GPM SINGLE STAGE PUC-NG PUMP
2. AIR INLET/OUTLET WITH DISCONNECT FITTING LOCATED ON DRIVER'S SIDE PUMP PANEL
3. WARN #10,000 PORTABLE RECEIVER STYLE WINCH
4. FLOOR IN CAB AND CREW CAB TO BE PADDED RUBBER
5. KUSSMAUL CHEIF 40 AMP CHARGER IN LEFT SIDE REAR FACING SEAT RISER
6. BATTERY CHARGE INDICATOR LOCATED ON DRIVER'S SEAT RISER
7. PIERCE LED STRIP LIGHTS IN ALL BODY COMPARTMENTS
8. (1) 15/20A,120V DUPLEX RECEPTACLE IN THE OFFICER'S SIDE EMS CABINET

CLEAR DOOR WIDTH KEY

AMDOR ROLL UP DOORS:	-2 1/4"
GORTITE ROLL UP DOORS:	-2 1/2"
PIERCE DOUBLE LAP DOORS:	-4 1/4"
PIERCE LIFT-UP LAP DOORS:	-1 1/2"

(EX: 60"F-F - 2 1/4"= 57 3/4" CLEAR)
(F-F)= FRAME TO FRAME

REV	DATE	BY	CH
5	19AUG25	DHE	AZU
4	30MAY25	DHE	AZU
3	28MAR25	DHE	GFI
2	21MAR25	DHE	GFI

CHASSIS DATA	
MAKE	PIERCE
MODEL	EN7010
DWG NO.	41160AD

Pierce MANUFACTURING INC.

TITLE	HEAVY DUTY RESCUE RESCUE PUC W/500 GAL WATER TANK
FOR	KENNER FIRE DEPARTMENT — BID #332 SIDDONS-MARTIN EMERGENCY GROUP — LANCE BOUEY

JOB NO.	41160
SCALE	1:24
DATE	29JAN25
DRAWN BY	DHE
CHECKED BY	GFI
SHEET SIZE	D
SHEET NO.	1 OF 1

View File Created 20-AUG-2025 07:10:15