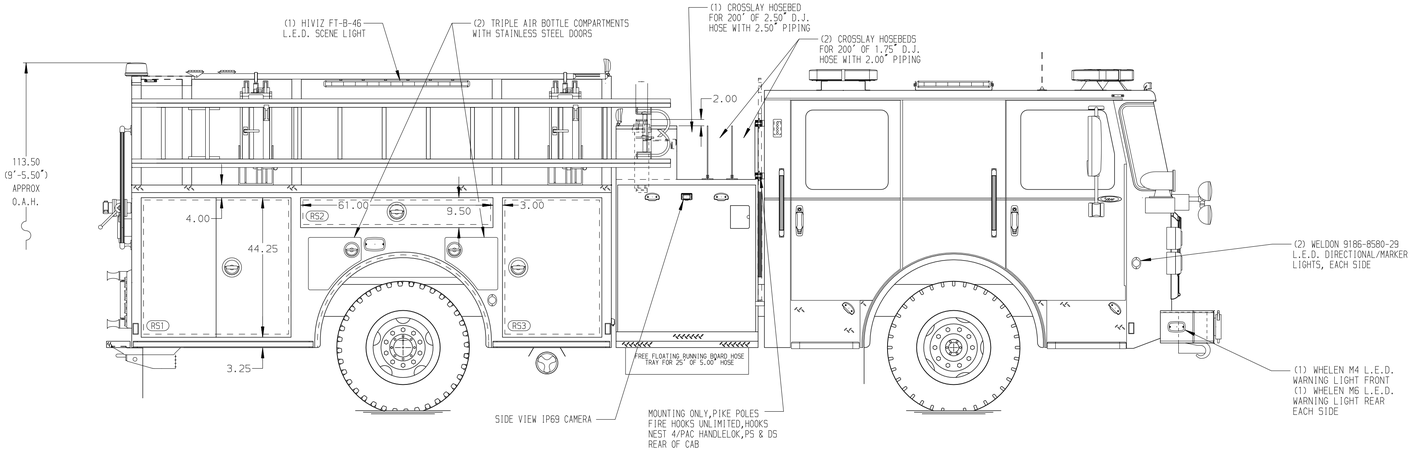

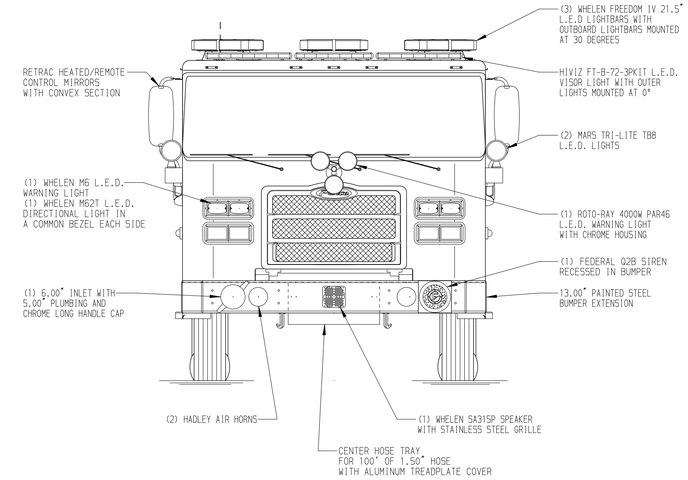

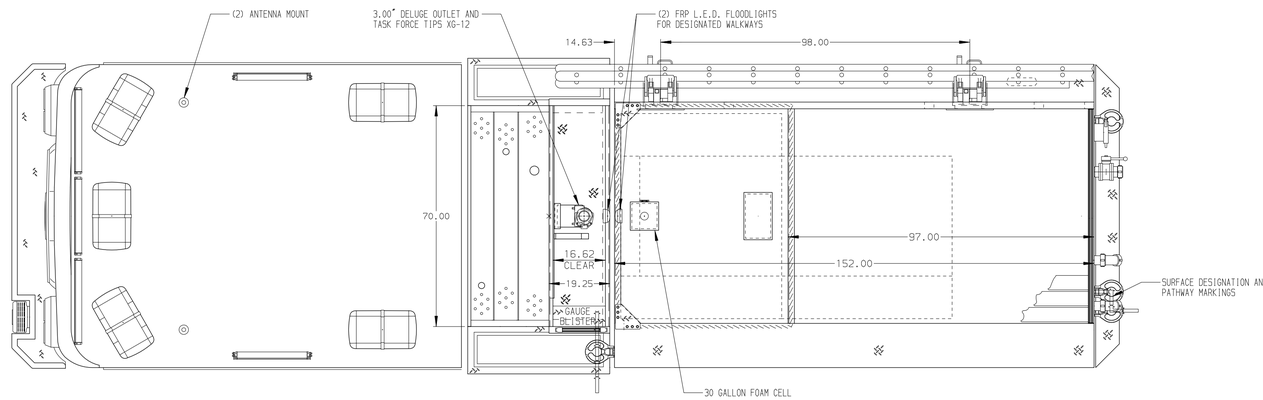

HOSEBED CAPACITIES

1. 250' OF 2.50" SINGLE STACK D.J. HOSE
2. 250' OF 2.50" SINGLE STACK D.J. HOSE
3. 1200' OF 4.00" D.J. POLY HOSE

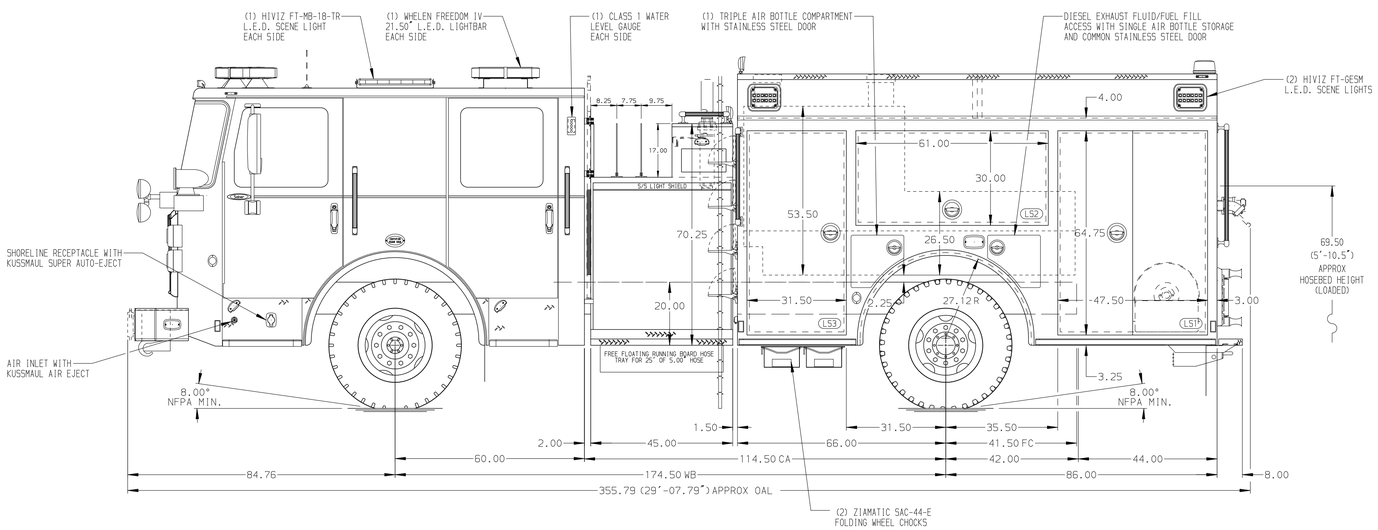

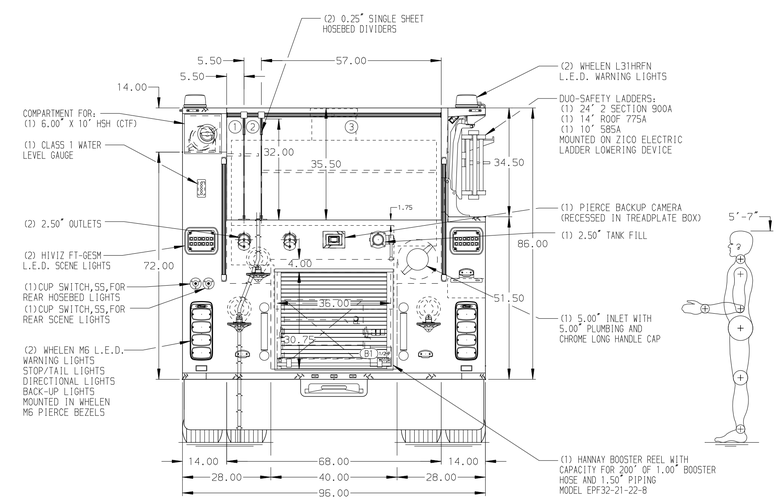

ALUMINUM BODY

MAXIMUM O.A.H. 114"

NOTE

DIMENSIONS SHOWN ARE APPROXIMATE AND ARE SUBJECT TO MINOR DEVIATIONS AS MAY OCCUR OR BE NECESSARY IN CONSTRUCTION.
MINOR DETAILS NOT SHOWN.

REV	DATE	BY	CH
D	26AUG25	ADP	JAP
C	18AUG25	ADP	JAP
B	22MAY25	RHU	JAP
A	21MAR25	JDA	CDU

CHASSIS DATA
MAKE: PIERCE
MODEL: SABER FR

Pierce MANUFACTURING INC.

TITLE: 1500GPM, 780G TANK, 750G WATER, 30G FOAM 152" PUMPER, HARDWIRED

FOR: POCA VOLUNTEER FIRE DEPARTMENT POCA, WEST VIRGINIA

DWG NO.: 41209AD

JOB NO.	41209
SCALE	1:24
DATE	
DRAWN BY	JDA 17MAR25
CHECKED BY	CDU 17MAR25
SHEET SIZE	D
SHEET NO.	1 OF 1

View File Created 26-AUG-2025 09:57:15