RIGHT SIDE COMPARTMENTS CONTAIN THE FOLLOWING:

COMPARTMENT RS1 CONTAINS:
- (1) STD DEPTH ADJ SLIDE OUT/TILT TRAY
- (2) FLOOR MOUNTED TRAYS W/TOOLBOARDS
- (1) ELECTRIC CORD REEL WITH 150' OF 10/3 YELLOW CORD
- (1) 15/20A,120V 4-PLACE RECEPTACLE

COMPARTMENT RS2 CONTAINS:
- (1) RACK FOR 4 SCBA BOTTLES
- (1) STD DEPTH ADJ SHELF
- (1) VERTICAL COMPARTMENT DIVIDER
- CARGO RETENTION NETTING

COMPARTMENT RS3 CONTAINS:
- (1) HORIZONTAL FLOOR EXTENSION
- (3) 2-WAY FLOOR MOUNTED TRAYS WITH TOOBOARDS
- (1) FLOOR MOUNTED TRAY
-
-
-

COMPARTMENT RS4 CONTAINS:
- (1) CAB LIFT CONTROLLER
- (1) FLOOR MOUNTED TRAY
- (7) TROUGHS FOR EQUIPMENT
-
-
-

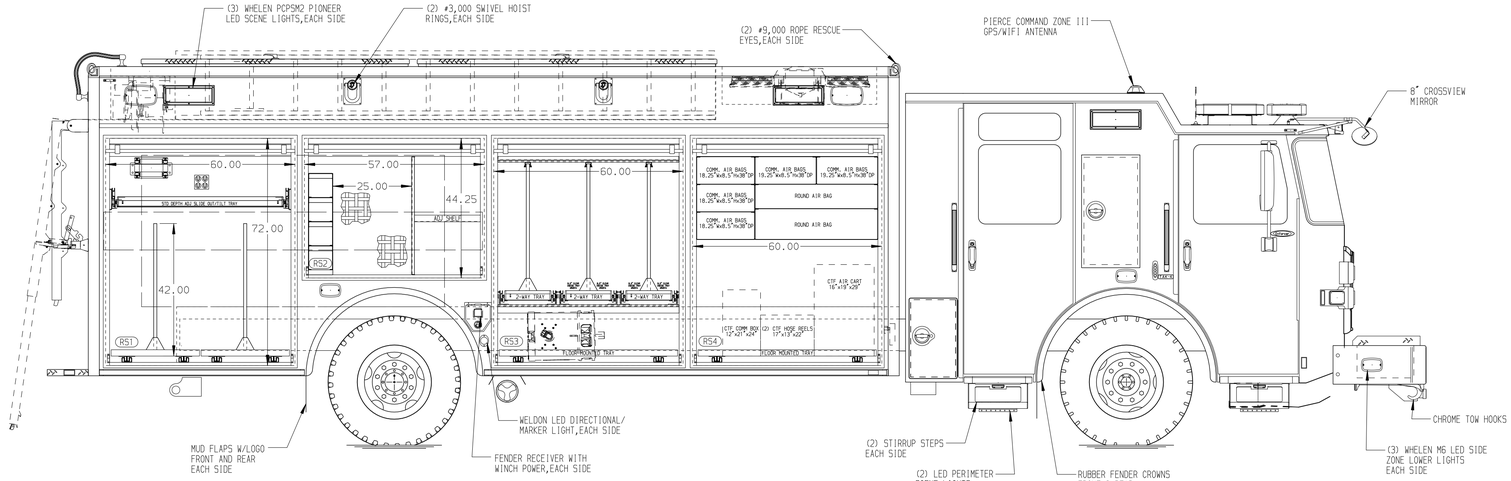

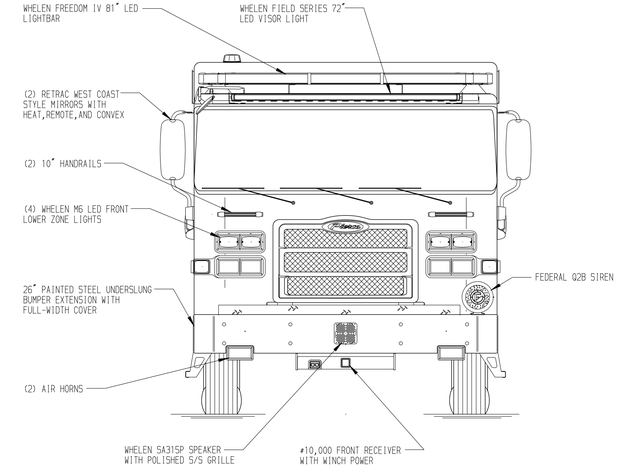

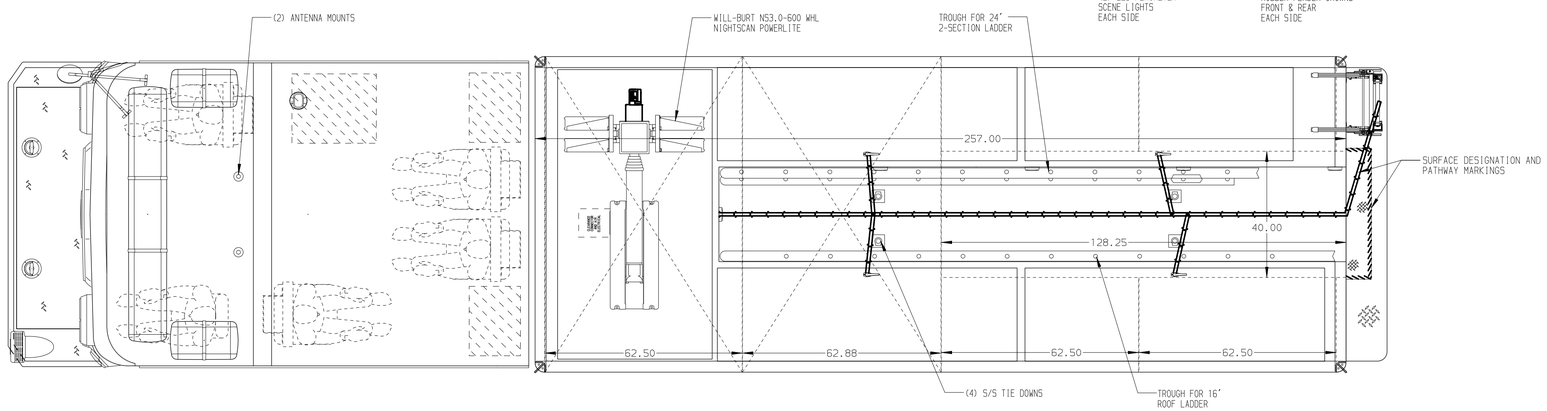

REAR COMPARTMENT CONTAINS THE FOLLOWING:

COMPARTMENT B1 CONTAINS:
- (1) HORIZONTAL FLOOR EXTENSION
- (1) RACK FOR THE FOLLOWING:
  - (6) FIN FORM BOARDS
  - (6) 4' X 8' PLYWOOD SHEETS
  - (6) 2' X 8' PLYWOOD SHEETS
  - (2) 6" X 6" X 10' SHORING LUMBER
  - (6) 4" X 4" X 10' SHORING LUMBER
  - (2) 2" X 12" X 10' SHORING LUMBER
  - (1) RESCUE TRIPOD
  - (1) YATES PACK
  - (1) 10' FOLDING LADDER
  - (5) PIKE POLES
- (1) FLOOR MOUNTED TRAY
-

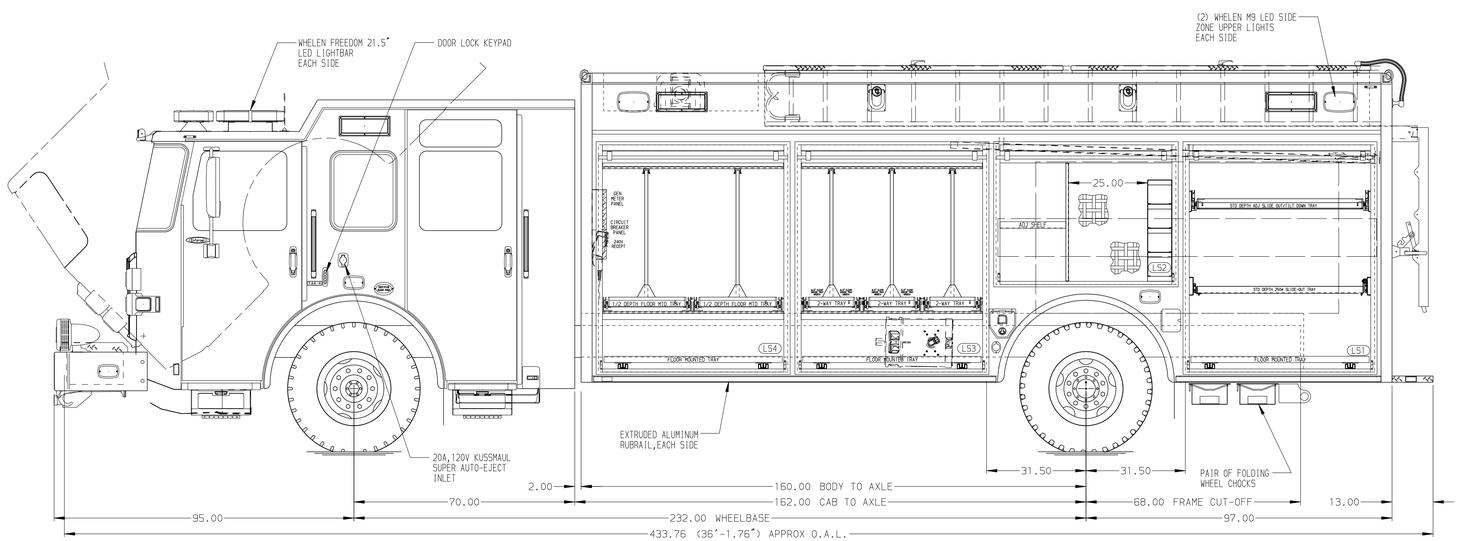

LEFT SIDE COMPARTMENTS CONTAIN THE FOLLOWING:

COMPARTMENT LS1 CONTAINS:
- (1) STD DEPTH ADJ SLIDE OUT TRAY
- (1) STD DEPTH ADJ SLIDE OUT/TILT TRAY
- (1) FLOOR MOUNTED TRAY
-
-
-

COMPARTMENT LS2 CONTAINS:
- (1) RACK FOR 4 SCBA BOTTLES
- (1) STD DEPTH ADJ SHELF
- (1) VERTICAL COMPARTMENT DIVIDER
- CARGO RETENTION NETTING

COMPARTMENT LS3 CONTAINS:
- (1) HORIZONTAL FLOOR EXTENSION
- (3) 2-WAY FLOOR MOUNTED TRAYS WITH TOOLBOARDS
- (1) FLOOR MOUNTED TRAY
-
-
-

COMPARTMENT LS4 CONTAINS:
- (1) HORIZONTAL FLOOR EXTENSION
- (2) 1/2 DEPTH FLOOR MTD SLIDE OUT TRAYS WITH TOOLBOARDS
- (1) CIRCUIT BREAKER PANEL
- (1) GENERATOR METER PANEL
- (1) NIGHTSCAN CONTROLLER
- (1) FLOOR MOUNTED TRAY
- (1) 20A,240V T.L. RECEPTACLE
-

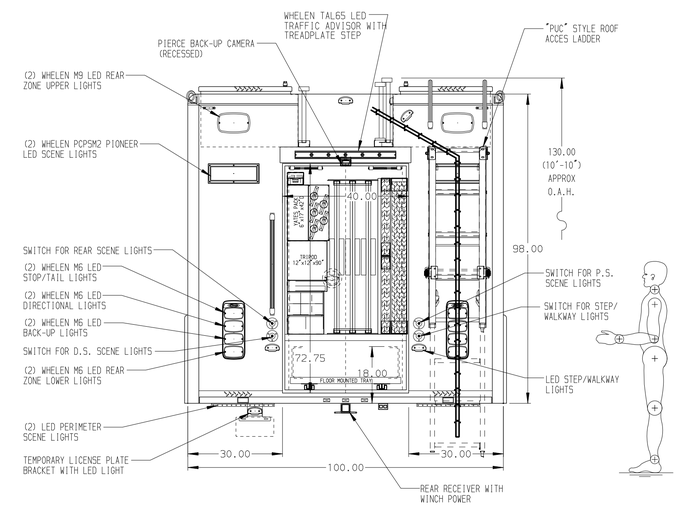

NOTE

DIMENSIONS SHOWN ARE APPROXIMATE AND ARE SUBJECT TO MINOR DEVIATIONS AS MAY OCCUR OR BE NECESSARY IN CONSTRUCTION.
MINOR DETAILS NOT SHOWN.

NOTES:
1. AIR INLET WITH DISCONNECT COUPLING LOCATED IN DRIVER'S STEP WELL
2. WARN #10,000 PORTABLE RECEIVER STYLE WINCH
3. POLISHED S/S SCUFFPLATES ON CAB AND CREW CAB DOOR JAMBS
4. FLOOR IN CAB AND CREW CAB TO BE PADDED RUBBER
5. KUSSMAUL CHIEF 40 AMP BATTER CHARGER LOCATED BEHIND THE DRIVER'S SEAT
6. BATTERY CHARGE INDICATOR LOCATED ON DRIVER'S SEAT RISER
7. PIERCE LED LIGHTS IN ALL BODY AND HATCH COMPARTMENTS
8. HARRISON 35kW SINGLE PHASE PTO DRIVEN GENERATOR LOCATED BETWEEN THE FRAME RAILS

SIDE ROLL AND FRONTAL IMPACT PROTECTION

CLEAR DOOR WIDTH KEY

AMDOR ROLL UP DOORS:	-2 1/4"
GORTITE ROLL UP DOORS:	-2 1/2"
PIERCE DOUBLE LAP DOORS:	-4 1/4"
PIERCE LIFT-UP LAP DOORS:	-1 1/2"

(EX: 60"F-F - 2 1/4"= 57 3/4" CLEAR)
(F-F)= FRAME TO FRAME

REV	DATE	BY	CH
7	19SEP25	DHE	CDK
6	16JUL25	DHE	CDK
5	12JUN25	DHE	CDK
4	17APR25	SHD	GFI

CHASSIS DATA	
MAKE	PIERCE
MODEL	EN7010

Pierce MANUFACTURING INC.

TITLE	HEAVY DUTY RESCUE NON-WALKIN	JOB NO.	41219
		SCALE 1:24	DATE
		DRAWN BY DHE	19FEB25
FOR	MANHATTAN BID #1147 CONRAD FIRE EQUIPMENT ROGER BROWN	CHECKED BY GFI	20FEB25
DWG NO.	41219AD	SHEET SIZE D	SHEET NO. 1 OF 1

View File Created 22-SEP-2025 09:36:45