RIGHT SIDE COMPARTMENTS CONTAIN THE FOLLOWING:

COMPARTMENT RS1 CONTAINS:
- (3) STD DEPTH ADJ SHELVES
- (1) 15/20A,120V DUPLEX RECEPTACLE
-
-
-
-
-

COMPARTMENT RS2 CONTAINS:
- (1) SWING OUT TOOLBOARD
- RACK FOR THREE AIR BAGS
- (1) 14" DP ADJ SHELF BEHIND TOOLBOARD
- (1) VERTICAL DIVIDER

COMPARTMENT RS3 CONTAINS:
- (3) STD DEPTH ADJ SHELVES
- (1) VERTICAL DIVIDER
- PEGBOARD ON FORWARD BACK WALL
- BLISTER CEILING FORWARD OF DIVIDER
-
-
-
-

COMPARTMENT RS4 CONTAINS:
- (1) ELECTRIC CORD REEL WITH 200' OF 12/4 YELLOW CORD
- (2) STD DEPTH ADJ SHELVES
- PEGBOARD ON BACK WALL
-
-
-
-

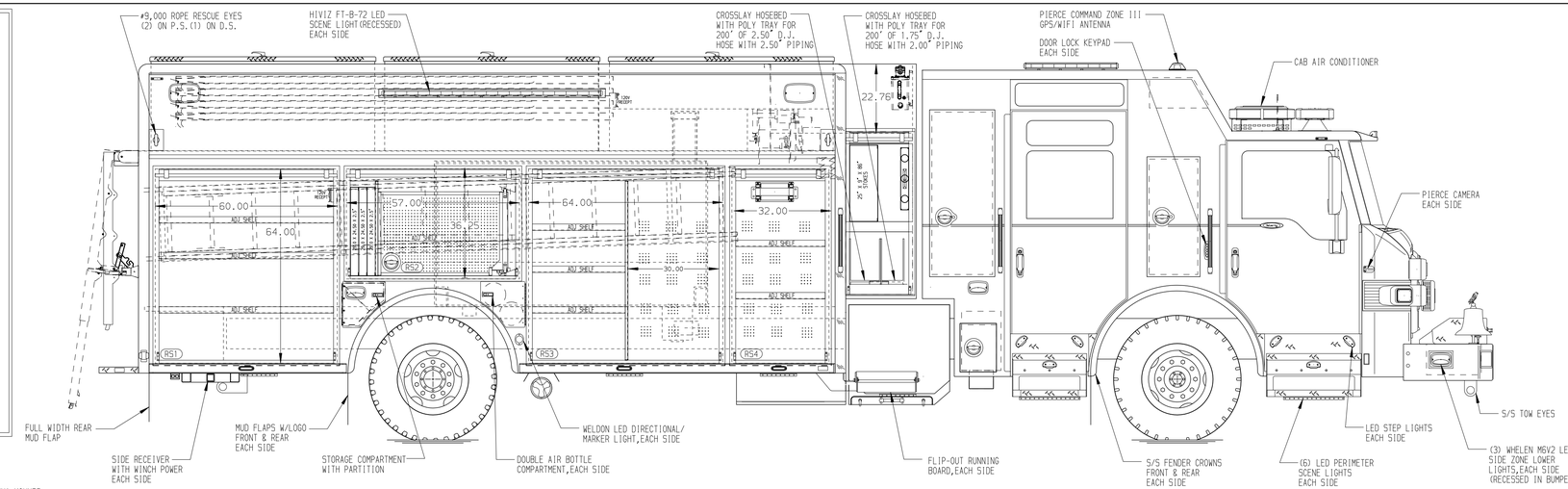

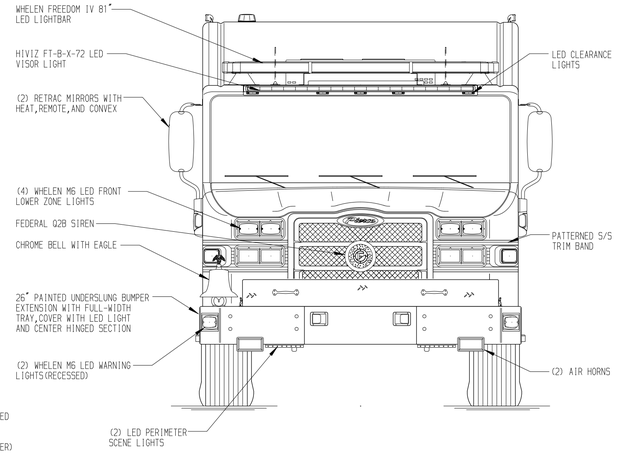

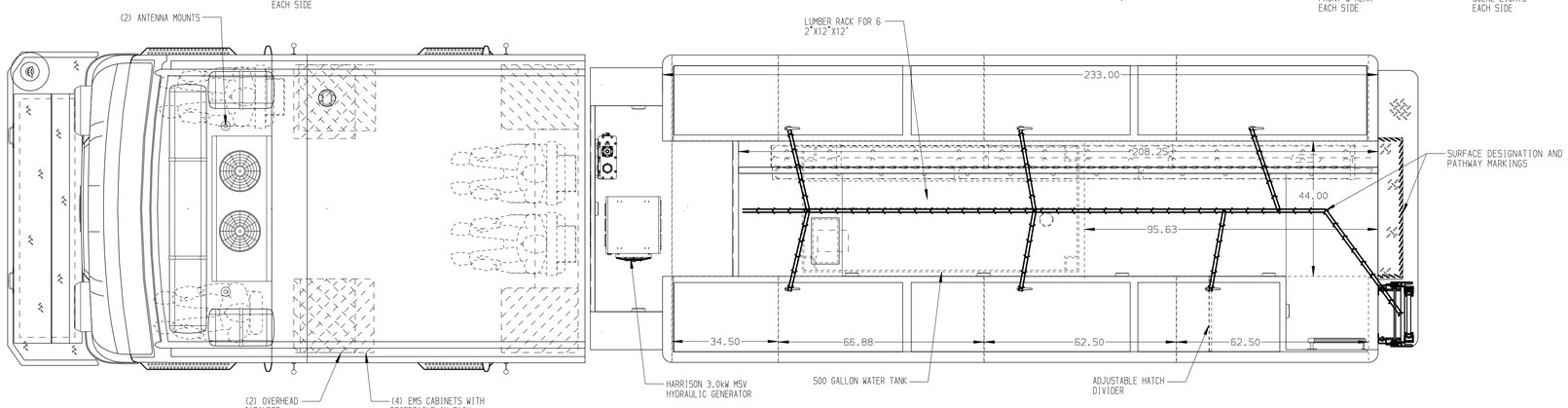

REAR COMPARTMENT CONTAINS THE FOLLOWING:

COMPARTMENT B1 CONTAINS:
- (1) HORIZONTAL FLOOR EXTENSION
- (2) 90"DP FLOOR MTD SLIDEMASTER TRAYS
- (3) PARTITION ON UPPER SLIDEMASTER TRAY FOR 2 SECTIONS OF 500' OF 2.5" HOSE
- (1) FALSE FLOOR FOR UPPER TRAY
- (1) RACK FOR THE FOLLOWING:
  - (1) 28' 2-SECTION LADDER
  - (1) 16' ROOF LADDER
  - (1) 10' FOLDING LADDER
-
-
-
-

HOSEBED CAPACITY

① 600' OF 5.00" HOSE

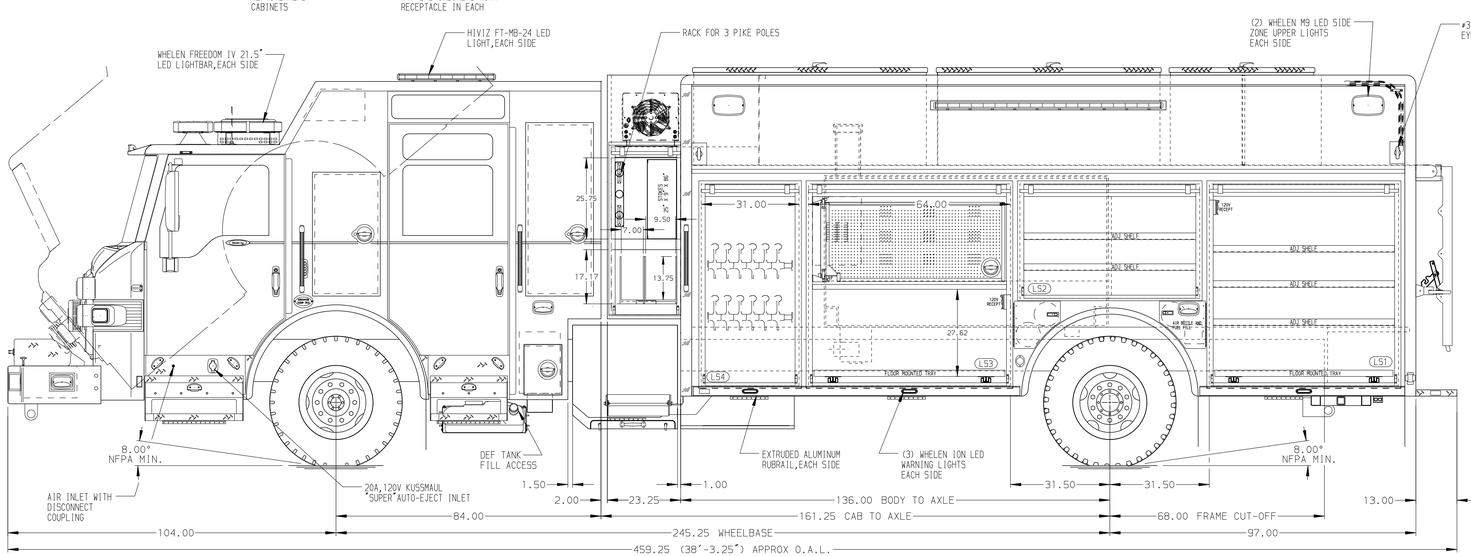

LEFT SIDE COMPARTMENTS CONTAIN THE FOLLOWING:

COMPARTMENT LS1 CONTAINS:
- (1) FLOOR MOUNTED TRAY
- (3) STD DEPTH ADJ SHELVES
- (1) 15/20A,120V DUPLEX RECEPTACLE
-
-
-
-
-

COMPARTMENT LS2 CONTAINS:
- (2) STD DEPTH ADJUSTABLE SHELVES
-
-
-
-

COMPARTMENT LS3 CONTAINS:
- (1) STD DEPTH FLOOR EXTENSION
- (1) FLOOR MOUNTED TRAY
- (1) SWING OUT TOOLBOARD
- CIRCUIT BREAKER PANEL
- GENERATOR METER PANEL
- (1) 15/20A,120V DUPLEX RECEPTACLE
- PEGBOARD ON BACK UPPER WALL OF COMPT
-

COMPARTMENT LS4 CONTAINS:
-
-
-
-
-

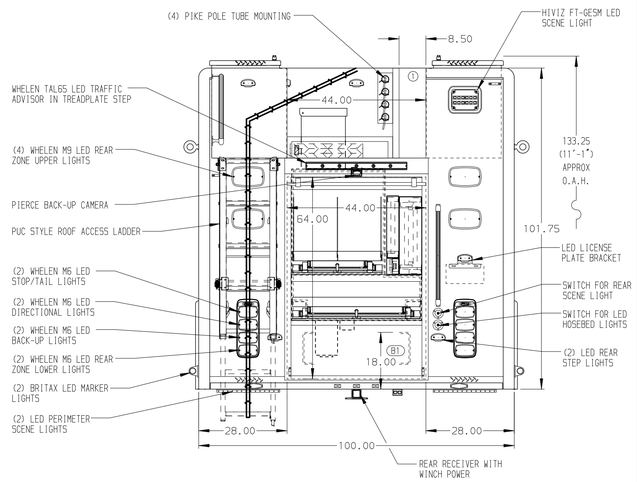

NOTE

DIMENSIONS SHOWN ARE APPROXIMATE AND ARE SUBJECT TO MINOR DEVIATIONS AS MAY OCCUR OR BE NECESSARY IN CONSTRUCTION.
MINOR DETAILS NOT SHOWN.

NOTES:
1. PIERCE 1500 GPM PUC STYLE WATER PUMP
2. ALUMINUM TREADPLATE ON REAR OF ENGINE TUNNEL
3. POLISHED S/S SCUFFPLATES ON CAB AND CREW CAB DOOR JAMBS
4. ALUMINUM SHELF MOUNTED ON REAR WALL OF CAB WITH NETTING
5. FLOOR IN CAB AND CREW CAB TO BE PADDED RUBBER
6. BRUSHED S/S SCUFFPLATE ON FRONT BODY CORNERS
7. S/S L-SHAPED GUARDS ON ALL BODY ROLL-UP DOORS
8. PULL STRAPS ON ALL BODY AND CROSSLAY ROLL-UP DOORS
9. PIERCE LED LIGHTS LOCATED IN ALL BODY ROLL-UP DOORS
10. COLD CLIMATE PACKAGE MOUNTED BELOW PUMP AND PLUMBING
11. KUSSMAUL CHIEF 60 AMP CHARGER
12. BATTERY CHARGE INDICATOR LOCATED ON DRIVER'S SEAT RISER

SIDE ROLL AND FRONTAL IMPACT PROTECTION

CLEAR DOOR WIDTH KEY

AMDOR ROLL UP DOORS:	-2 1/4"
GORTITE ROLL UP DOORS:	-2 1/2"
PIERCE DOUBLE LAP DOORS:	-4 1/4"
PIERCE LIFT-UP LAP DOORS:	-1 1/2"

(EX: 60"F-F - 2 1/4"= 57 3/4" CLEAR)
(F-F)= FRAME TO FRAME

REV	DATE	BY	CH
1	01JUL25	SHD	AZU
2	07APR25	DHE	AZU
3	14FEB25	DHE	GFI

CHASSIS DATA
MAKE: PIERCE
MODEL: VXFR8420
DWG NO.: 41223AD

Pierce MANUFACTURING INC.

TITLE: HEAVY DUTY RESCUE
RESCUE PUC W/500 GAL WATER TANK

FOR: NAPERVILLE FIRE DEPARTMENT — BID #1134
MACQUEEN EMERGENCY GROUP — JOHN KENNA

JOB NO. 41223
SCALE 1:24
DATE
DRAWN BY DHE 07JAN25
CHECKED BY GFI 09JAN25
SHEET SIZE D
SHEET NO. 1 OF 1

View File Created 01-JUL-2025 14:09:20