RIGHT SIDE COMPARTMENTS
CONTAIN THE FOLLOWING:

COMPARTMENT RS1 CONTAINS:
- (1) VERTICAL PEGBOARD COMPARTMENT DIVIDER
- (2) STD DEPTH ADJ SHELVES
- (1) STD DEPTH FIXED SHELF
- (1) FLOOR MOUNTED TRAY WITH TOOLBOARD
- (1) 15/20A,120V DUPLEX RECEPTACLE
-
-

COMPARTMENT RS2 CONTAINS:
- (2) STD DEPTH ADJ SHELVES

COMPARTMENT RS3 CONTAINS:
- (1) STD DEPTH ADJ SHELF
- ALUMINUM TREADPLATE ON COMPARTMENT FLOOR
-

COMPARTMENT RS4 CONTAINS:
- (4) STD DEPTH ADJ SHELVES
- (1) STD DEPTH ADJ SLIDE OUT TOOLBOARD
- (1) VERTICAL PEGBOARD COMPARTMENT DIVIDER
- ALUMINUM TREADPLATE ON COMPARTMENT FLOOR
-
-

COMPARTMENT RS5 CONTAINS:
- (1) CAB LIFT CONTROLLER
- (2) VERTICAL PEGBOARD COMPARTMENT DIVIDERS
- (1) HORIZONTAL FLOOR EXTENSION
- (3) TRANSVERSE ADJ SHELVES
- (2) 2-WAY FLOOR MTD SLIDEMASTER TRAYS WITH TOOLBOARDS
- (1) TOOL AIR REEL WITH 200' OF HOSE
- AIR REGULATOR WITH GAUGES
-
-

COMPARTMENT RS6 CONTAINS:
- (2) 2-WAY ADJ SHELVES
- (2) 2-WAY ADJ 3/8"PLATES
- (1) RACK FOR STRUT STORAGE
-

COMPARTMENT RS7 CONTAINS:
- (1) ELECTRIC CORD REEL WITH 200' OF 10/3 YELLOW CORD

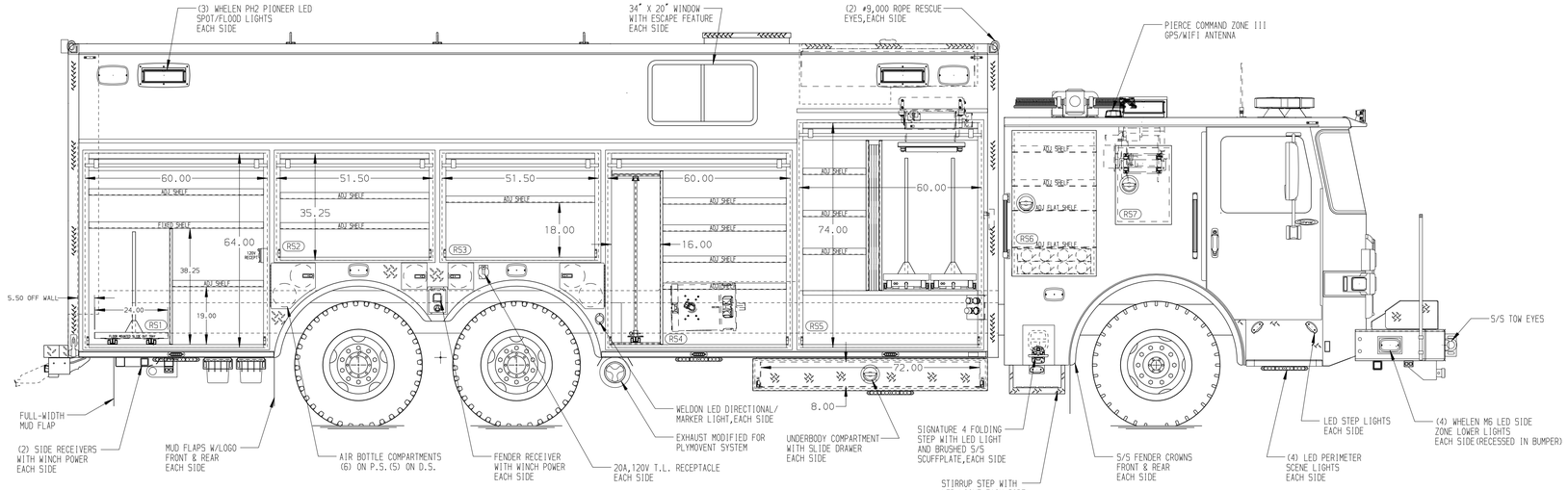

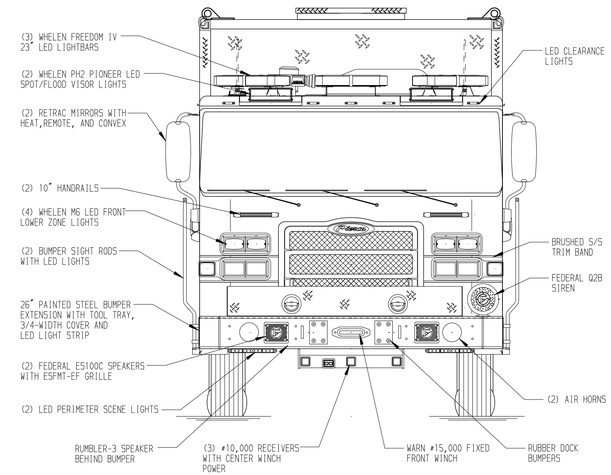

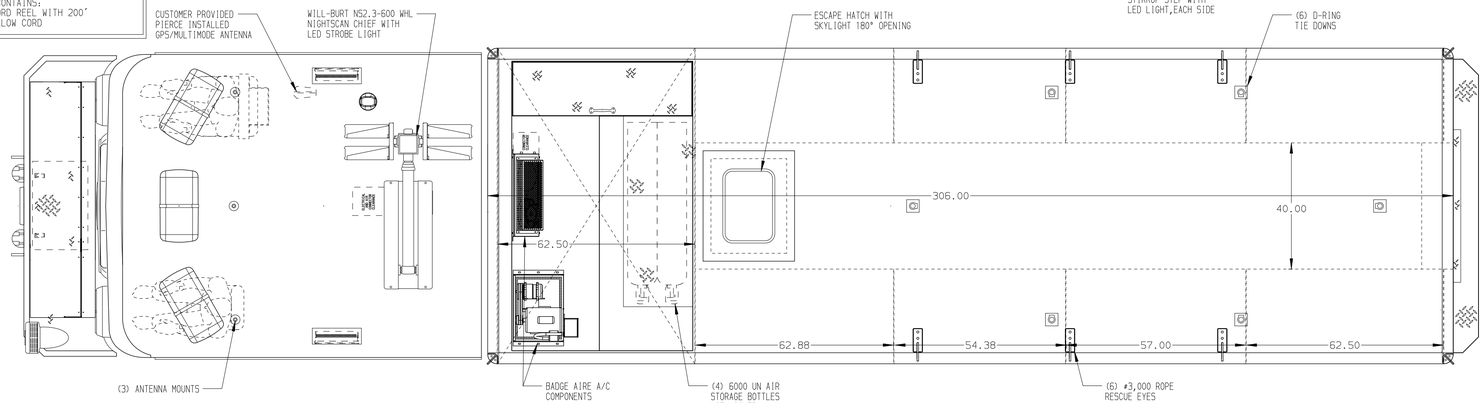

LEFT SIDE COMPARTMENTS
CONTAIN THE FOLLOWING:

COMPARTMENT LS1 CONTAINS:
- (4) STD DEPTH ADJ SHELVES
- (1) VERTICAL PEGBOARD COMPARTMENT DIVIDER
- (2) STD DEPTH ADJ SLIDE OUT TOOLBOARDS
- ALUMINUM TREADPLATE ON COMPARTMENT FLOOR
- (1) 15/20A,120V DUPLEX RECEPTACLE

COMPARTMENT LS2 CONTAINS:
- (2) STD DEPTH ADJ SHELVES
-
-

COMPARTMENT LS3 CONTAINS:
- (1) VERTICAL PEGBOARD COMPARTMENT DIVIDER
- (2) STD DEPTH ADJ SHELVES
- (1) 15/20A,120V DUPLEX RECEPTACLE
-

COMPARTMENT LS4 CONTAINS:
- (1) STORAGE TROUGH
- (1) STD DEPTH ADJ SHELF
- (1) RACK FOR 8 AIR BAGS
- (1) CASCADE SYSTEM CONTROL PANEL
- (1) "SPACESAVER"2-BOTTLE FILL ENCLOSURE
- (1) BREATHING AIR BOOSTER PUMP
- (1) FLOOR MOUNTED TRAY WITH TOOLBOARD

COMPARTMENT LS5 CONTAINS:
- (1) 6 GALLON DEF TANK WITH COVER
- (2) VERTICAL PEGBOARD COMPARTMENT DIVIDERS
- (1) HORIZONTAL FLOOR EXTENSION
- (3) TRANSVERSE ADJ SHELVES
- (2) 2-WAY FLOOR MTD SLIDEMASTER TRAYS WITH TOOLBOARDS
- (1) TOOL AIR REEL WITH 200' OF HOSE
- AIR REGULATOR WITH GAUGES
-
-
-

COMPARTMENT LS6 CONTAINS:
- (2) 2-WAY ADJ SHELVES
- (2) 2-WAY ADJ 3/8"PLATES
- (1) RACK FOR STRUT STORAGE
-

COMPARTMENT LS7 CONTAINS:
- (1) ELECTRIC CORD REEL WITH 200' OF 10/3 YELLOW CORD
-

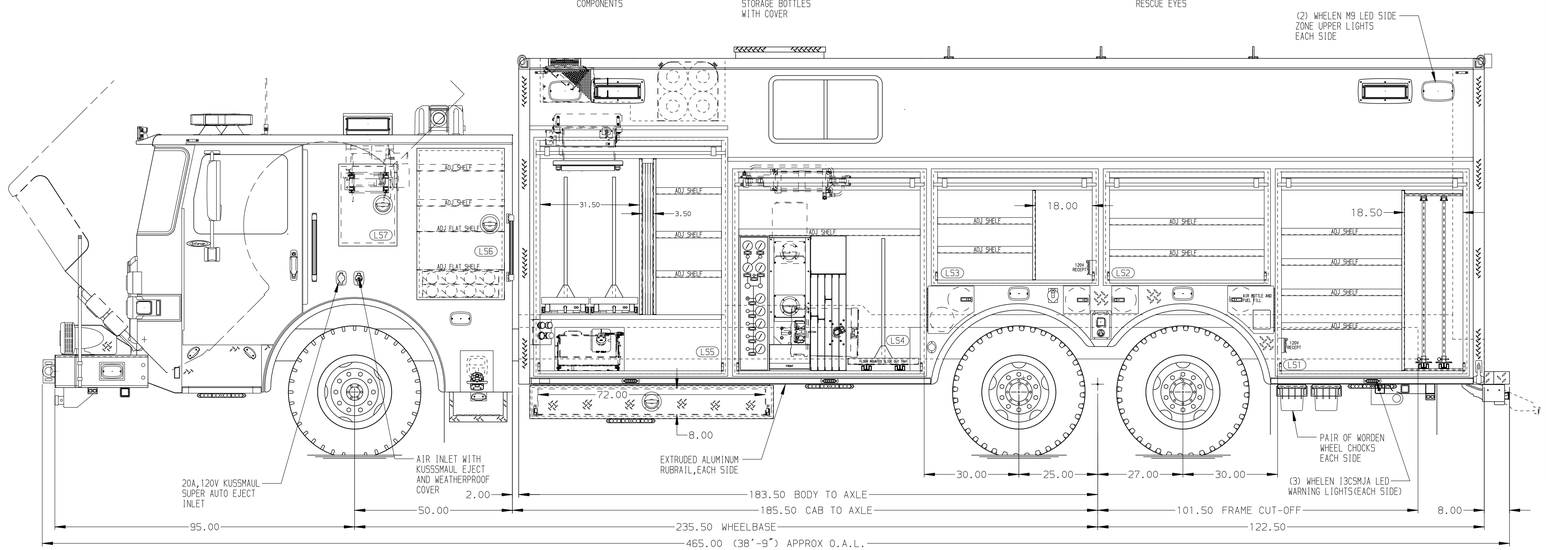

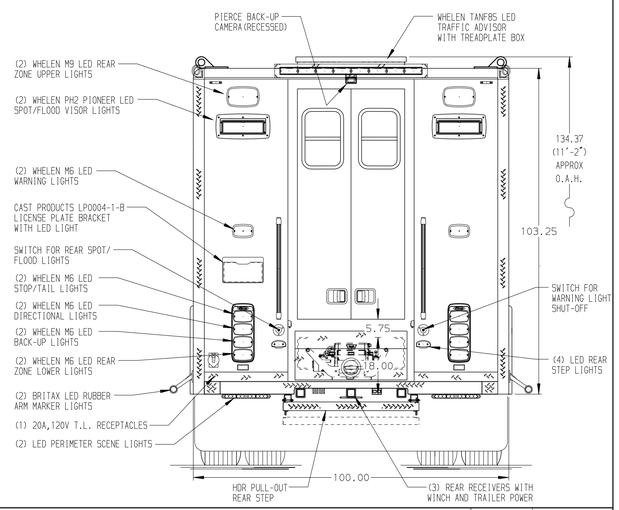

NOTE

DIMENSIONS SHOWN ARE APPROXIMATE AND ARE SUBJECT TO MINOR DEVIATIONS AS MAY OCCUR OR BE NECESSARY IN CONSTRUCTION.
MINOR DETAILS NOT SHOWN.

NOTES:
1. HARRISON 25Kw SINGLE PHASE PTO DRIVEN GENERATOR WITH SPLASH GUARD LOCATED BETWEEN THE FRAME RAILS
2. POLISHED S/S SCUFFPLATES ON CAB DOOR JAMBS
3. FLOOR IN CAB TO BE PADDED RUBBER
4. KUSSMAUL CHIEF 60 AMP CHARGER LOCATED BEHIND THE DRIVER'S SEAT
5. BATTERY CHARGE INDICATOR LOCATED ON DRIVER'S SEAT RISER
6. ALUMINUM TREADPLATE SCUFFPLATES ON FRONT AND REAR BODY CORNERS
7. ALUMINUM TREADPLATE ON FRONT OF BODY
8. ALUMINUM TREADPLATE ON REAR FENDER PANELS
9. S/S GUARDS ON ALL BODY ROLL-UP DOORS
10. PIERCE LED LIGHTS IN ALL BODY, CAB, AND HATCH COMPARTMENT
11. (1) 15/20A,120V DUPLEX RECEPTACLE LOCATED BEHIND OFFICER'S SEAT

NOTE:
COMPARTMENTS TO BE PAINTED SPATTER GRAY AND SHELVES AND TRAYS ARE TO BE BRUSHED ALUMINUM

MAXIMUM O.A.L.: 38'-9"

FRONTAL IMPACT PROTECTION

CLEAR DOOR WIDTH KEY	
AMDOR ROLL UP DOORS:	-2 1/4"
GORTITE ROLL UP DOORS:	-2 1/2"
PIERCE DOUBLE LAP DOORS:	-4 1/4"
PIERCE LIFT-UP LAP DOORS:	-1 1/2"
(EX: 60"F-F - 2 1/4"= 57 3/4" CLEAR) (F-F)= FRAME TO FRAME	

REV	DATE	BY	CH	
7	140CT25	DHE	AZU	CHASSIS DATA
6	02SEP25	DHE	AZU	
5	20JUN25	DHE	AZU	MAKE
4	12JUN25	DHE	AZU	PIERCE
3	03APR25	DHE	AZU	MODEL
				EN5000

Pierce MANUFACTURING INC.

TITLE	HEAVY DUTY RESCUE WALKIN	JOB NO.	41257
		SCALE 1:24	DATE
FOR	TOWNSHIP OF CRANFORD BID #943	DRAWN BY DHE	05FEB25
	FIRE & SAFETY SERVICES,LTD GREGG CARIDDI	CHECKED BY GFI	06JAN25
DWG NO.	41257AD-SH1	SHEET SIZE D	SHEET NO. 1 OF 1

View File Created 14-OCT-2025 10:49:12