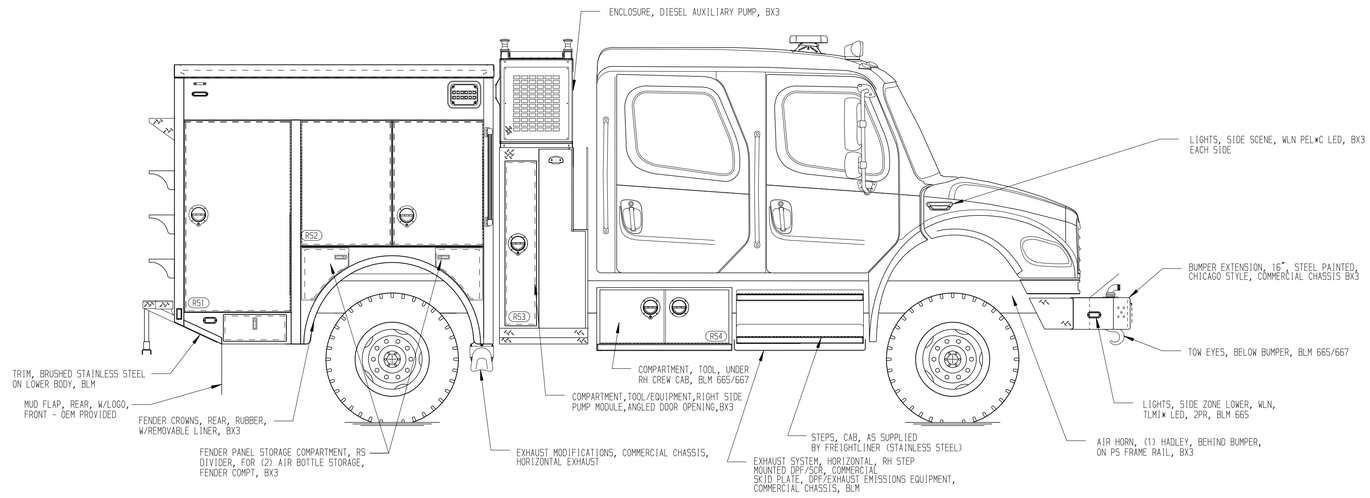


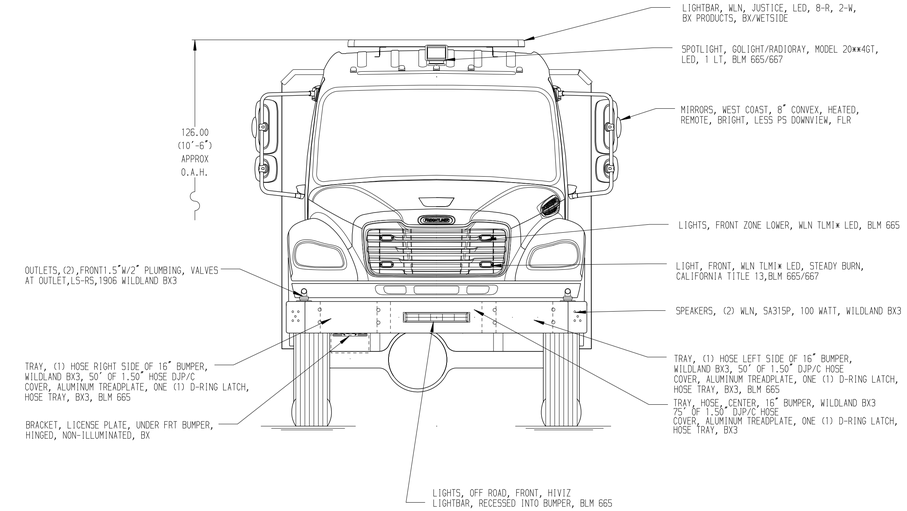


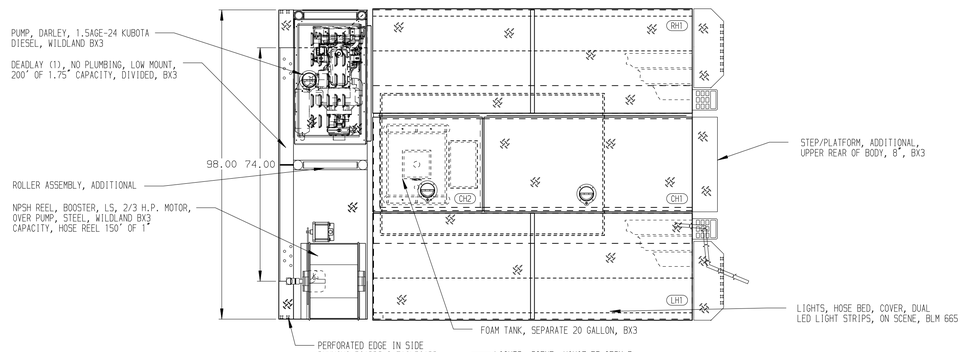


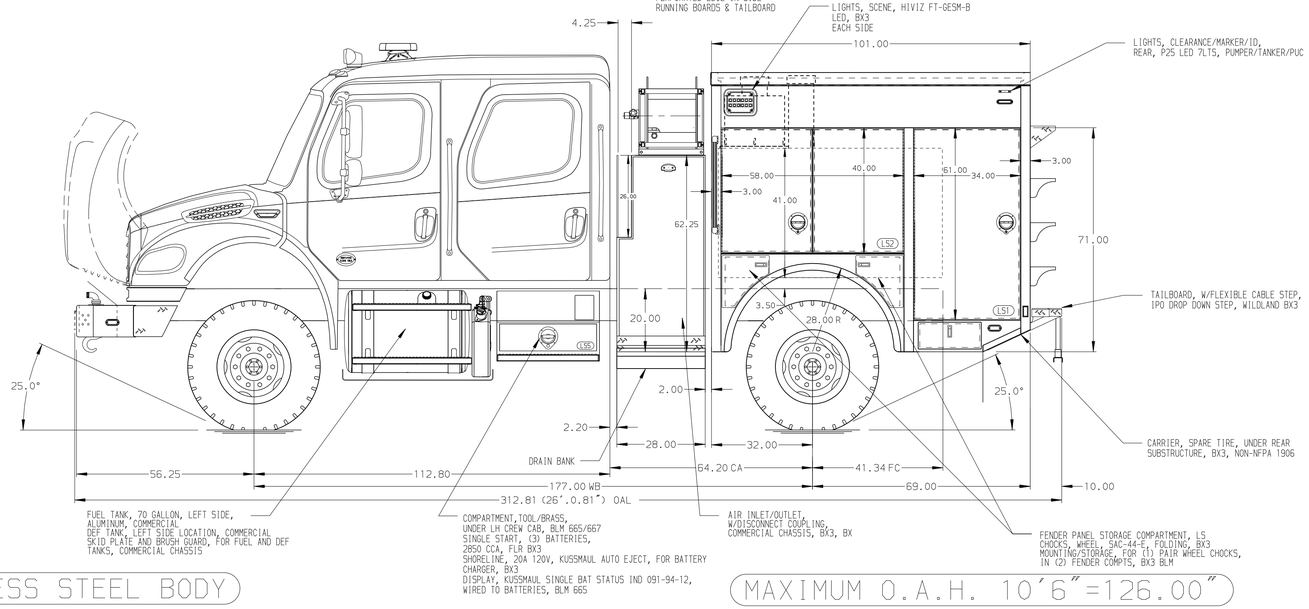


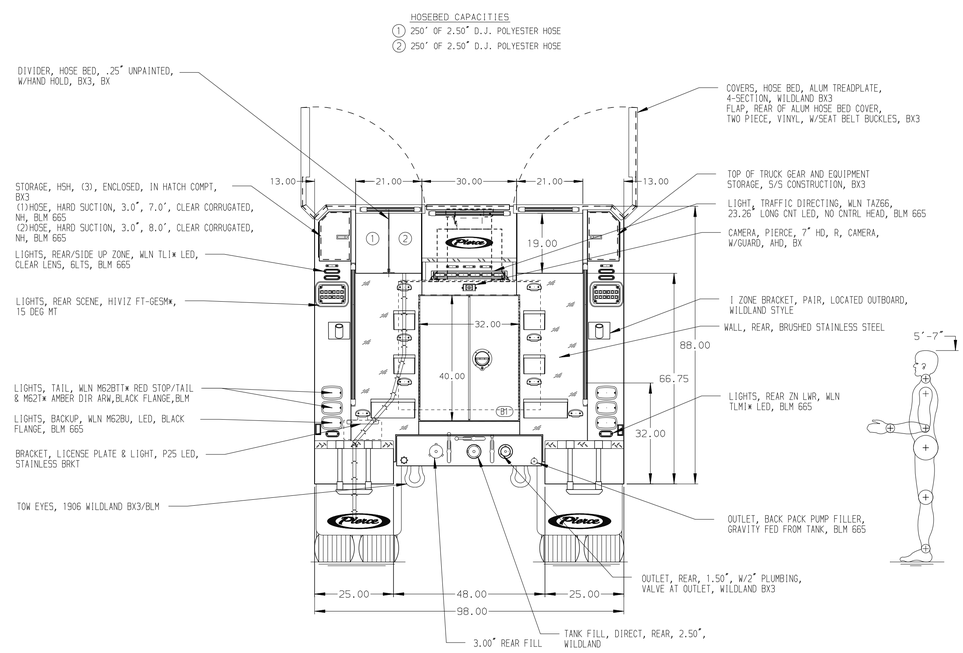


STAINLESS STEEL BODY

MAXIMUM O.A.H. 10'6"=126.00"

NOTE

DIMENSIONS SHOWN ARE APPROXIMATE AND ARE SUBJECT TO MINOR DEVIATIONS AS MAY OCCUR OR BE NECESSARY IN CONSTRUCTION.
MINOR DETAILS NOT SHOWN.

| REV | DATE | BY | CH |
|---|---|---|---|
| | | | |
| D | 04DEC25 | RHU | JAP |
| C | 14AUG25 | VHO | JAP |
| B | 18APR25 | VHO | AJA |

CHASSIS DATA
MAKE: FL
MODEL: M2-106 PLUS 4X4

Pierce MANUFACTURING INC.
BRADENTON, FLORIDA

TITLE: 500GPM, 520G TANK, 500G WATER, 20G FOAM 101" BODY WILDLAND BX3, WELDON V-MUX

FOR: BLM BAKERSFIELD FIELD OFFICE BAKERSFIELD, CALIFORNIA

DWG NO.: 41282AD

| JOB NO. | 41282 |
|---|---|
| SCALE | 1:24 |
| DATE | |
| DRAWN BY | RHU |
| | 17MAR25 |
| CHECKED BY | AJA |
| | 18MAR25 |
| SHEET SIZE | D |
| SHEET NO. | 1 OF 1 |

View File Created 17-DEC-2025 13:33:07