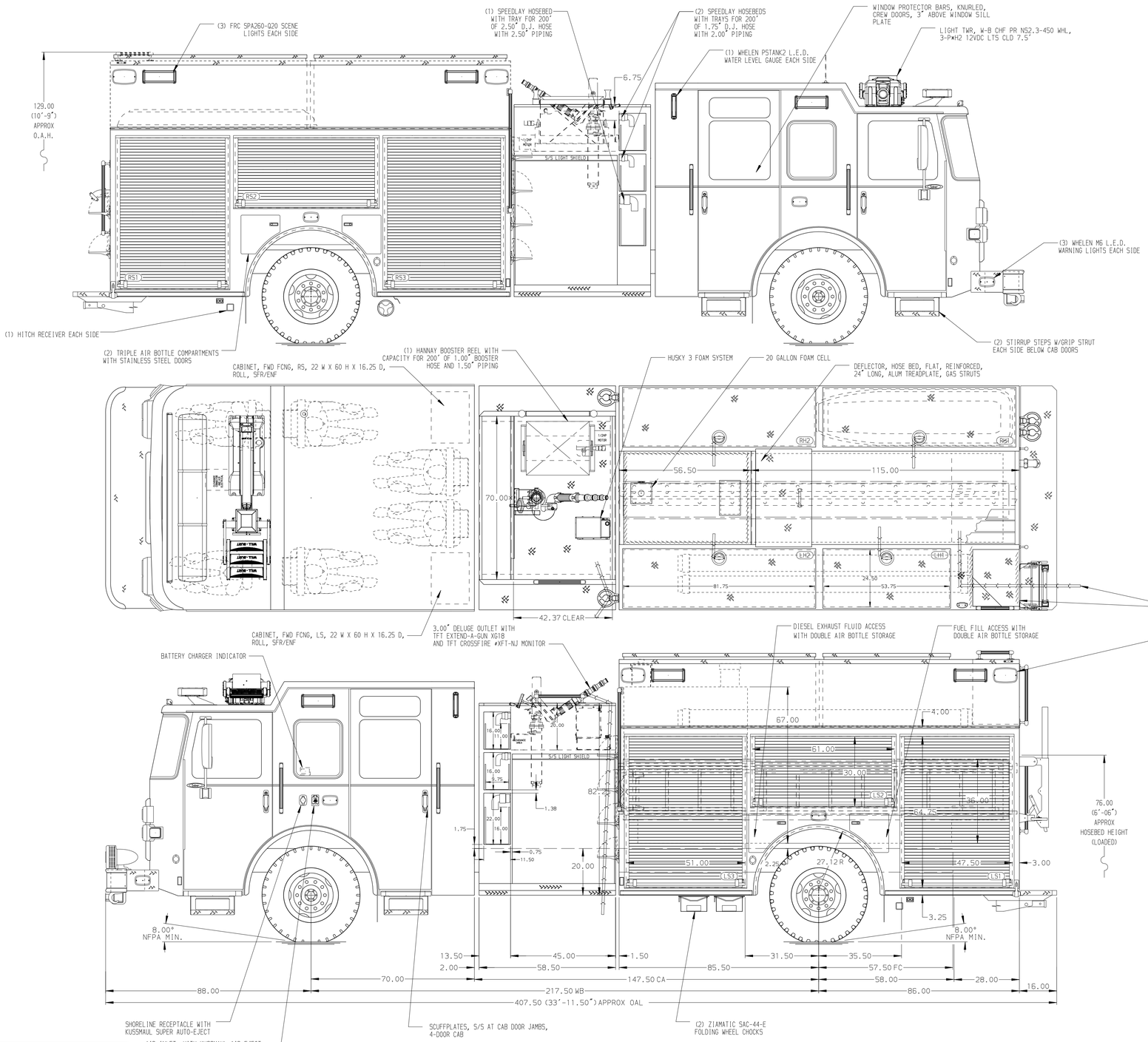

ALUMINUM BODY

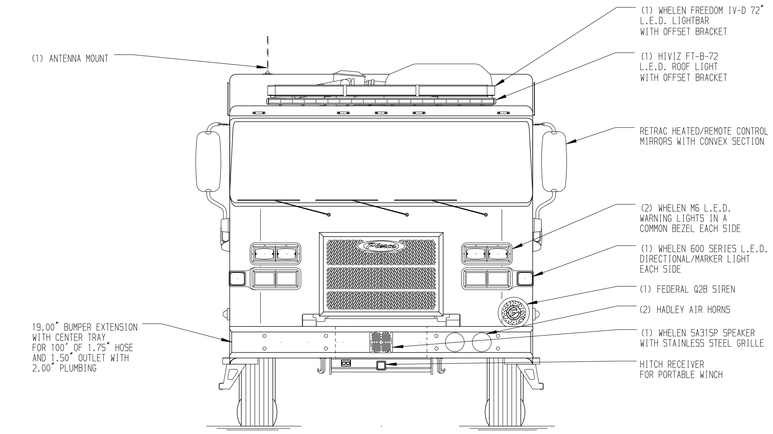

HOSEBED CAPACITIES

1. 1000' OF 5.00" D.J. POLY HOSE
2. 500' OF 3.00" D.J. POLY HOSE
3. 300' OF 1.75" D.J. POLY HOSE

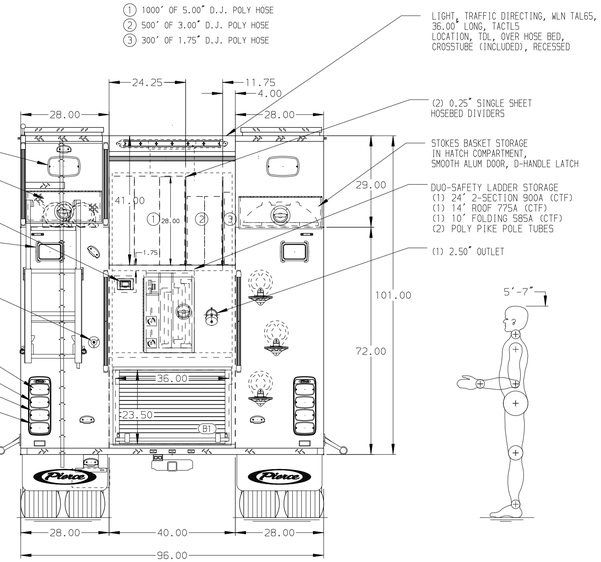

NOTE

DIMENSIONS SHOWN ARE APPROXIMATE AND ARE SUBJECT TO MINOR DEVIATIONS AS MAY OCCUR OR BE NECESSARY IN CONSTRUCTION.
MINOR DETAILS NOT SHOWN.

REV	DATE	BY	CH
V	24OCT25	TYB	MAR
B	17JUL25	VHO	MAR
V	05JUN25	LST	SZE

CHASSIS DATA	TITLE	1500GPM, 750G, 730G WATER, 20G FOAM 171" PUMPER, HARD WIRED	JOB NO. 41294
MAKE PIERCE	FOR	MILLER HOSE FIRE CO. NEWFANE, NEW YORK	SCALE 1:24
MODEL SABER FR	DWG NO.	41294AD	DRAWN BY JER — DATE 30MAY25
			CHECKED BY SZE — 30MAY25
			SHEET SIZE D — SHEET NO. 1 OF 1

Pierce MANUFACTURING INC.

View File Created 24-OCT-2025 13:53:22