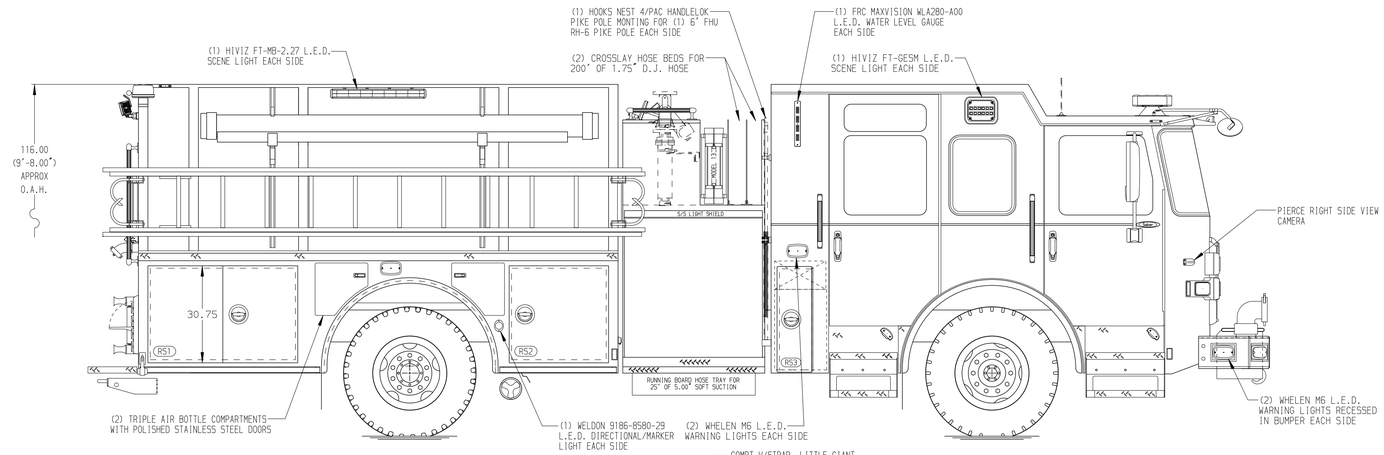

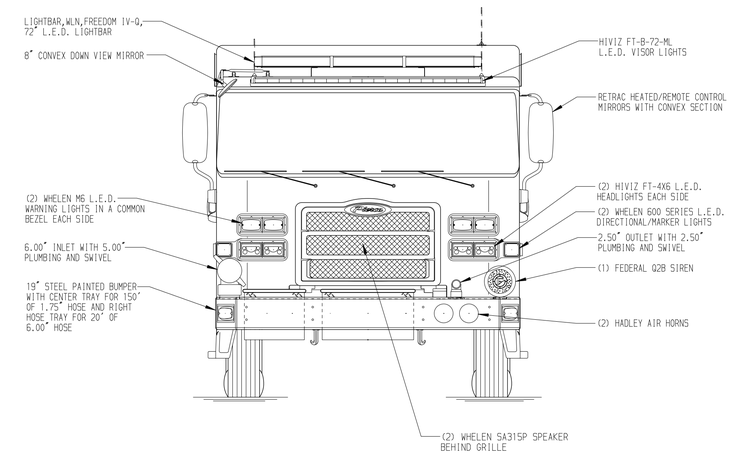

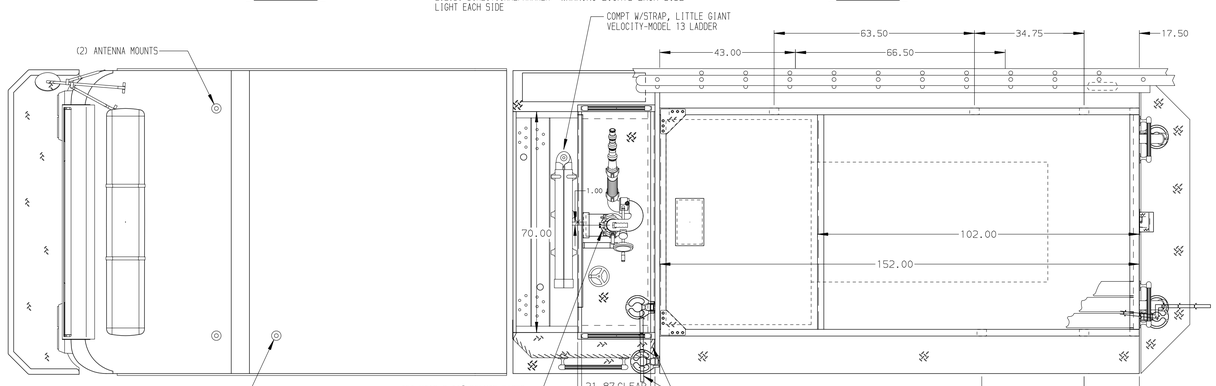

HOSEBED CAPACITIES

1. - 400' OF 1.75" D.J. POLY HOSE
2. - 200' OF 1.75" D.J. POLY HOSE
3. - 1000' OF 5.00" D.J. POLY HOSE
4. - 600' OF 3.00" D.J. POLY HOSE
5. - 400' OF 2.50" D.J. POLY HOSE

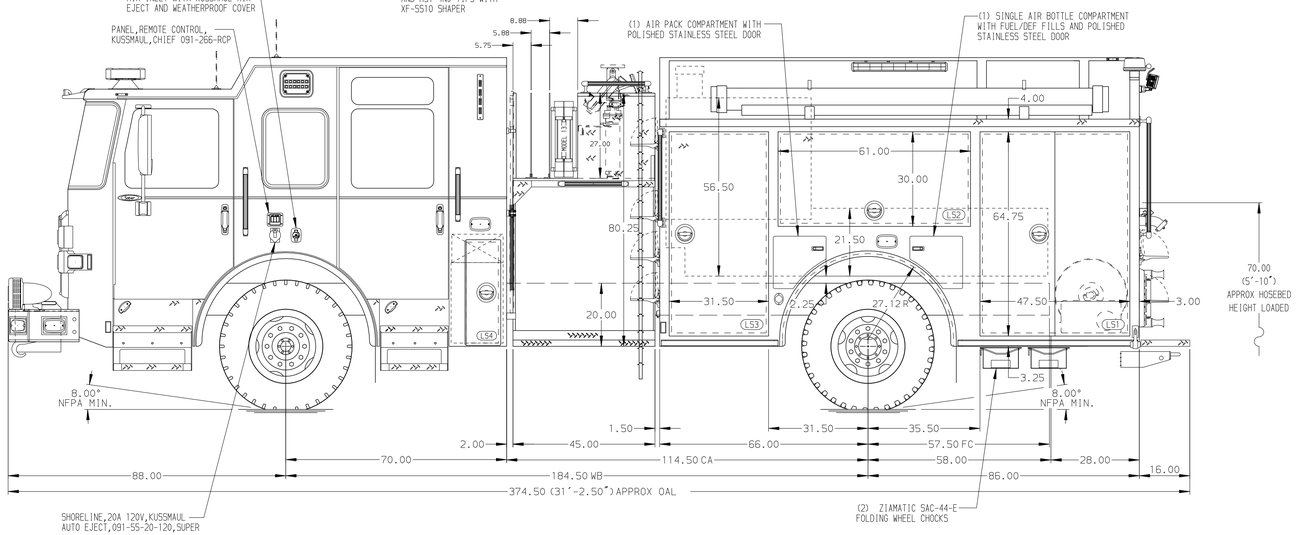

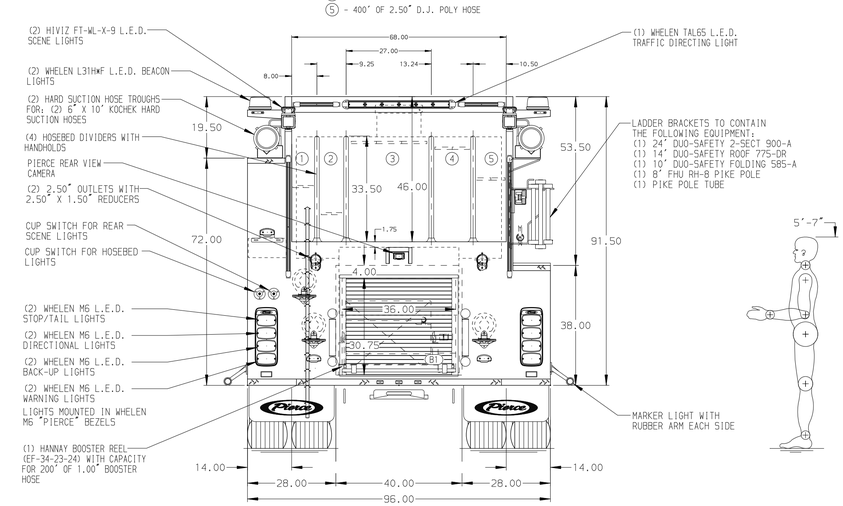

ALUMINUM BODY

SIDE ROLL AND FRONTAL IMPACT PROTECTION

NOTE

DIMENSIONS SHOWN ARE APPROXIMATE AND ARE SUBJECT TO MINOR DEVIATIONS AS MAY OCCUR OR BE NECESSARY IN CONSTRUCTION.
MINOR DETAILS NOT SHOWN.

REV	DATE	BY	CH
B	27OCT25	TYB	CCS
A	22JUL25	ADP	CCS

CHASSIS DATA — MAKE: PIERCE — MODEL: SABER FR

Pierce MANUFACTURING INC.

TITLE: 2000GPM, 750G TANK, 750G WATER, 0G FOAM 152" 2G PUMPER, HARDWIRED

FOR: STAFFORD TOWNSHIP MANAHAWKIN, NEW JERSEY

DWG NO.: 41295AD

JOB NO.	41295
SCALE	1:24
DATE	
DRAWN BY	SJM 03JUN25
CHECKED BY	SZE 3JUN25
SHEET SIZE	D
SHEET NO.	1 OF 1

View File Created 27-OCT-2025 09:30:07