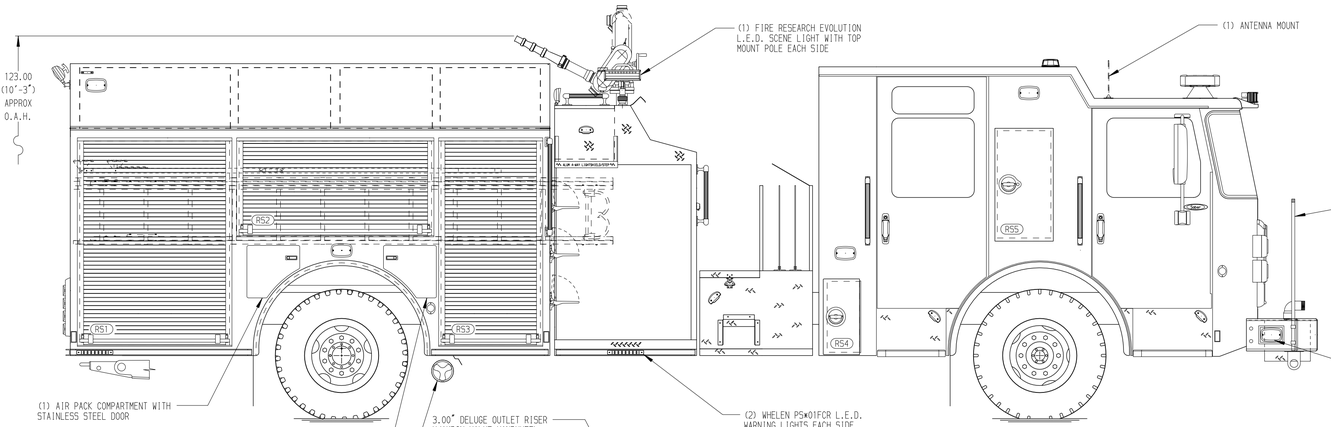

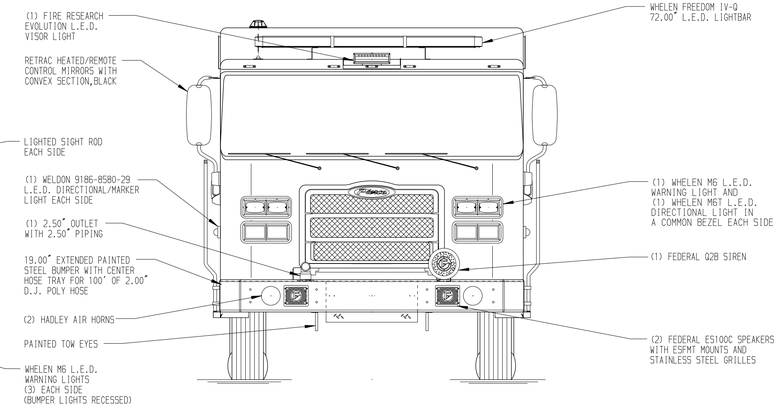

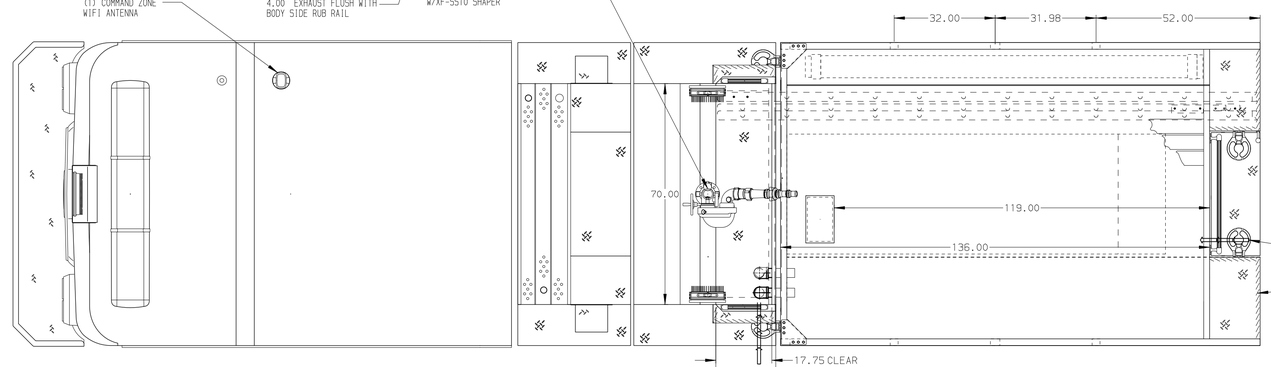

HOSEBED CAPACITIES

1. 300' OF 3.00" D.J. POLY HOSE
2. 150' OF 3.00" D.J. POLY HOSE
3. 150' OF 3.00" D.J. POLY HOSE
4. 1000' OF 5.00" D.J. POLY HOSE

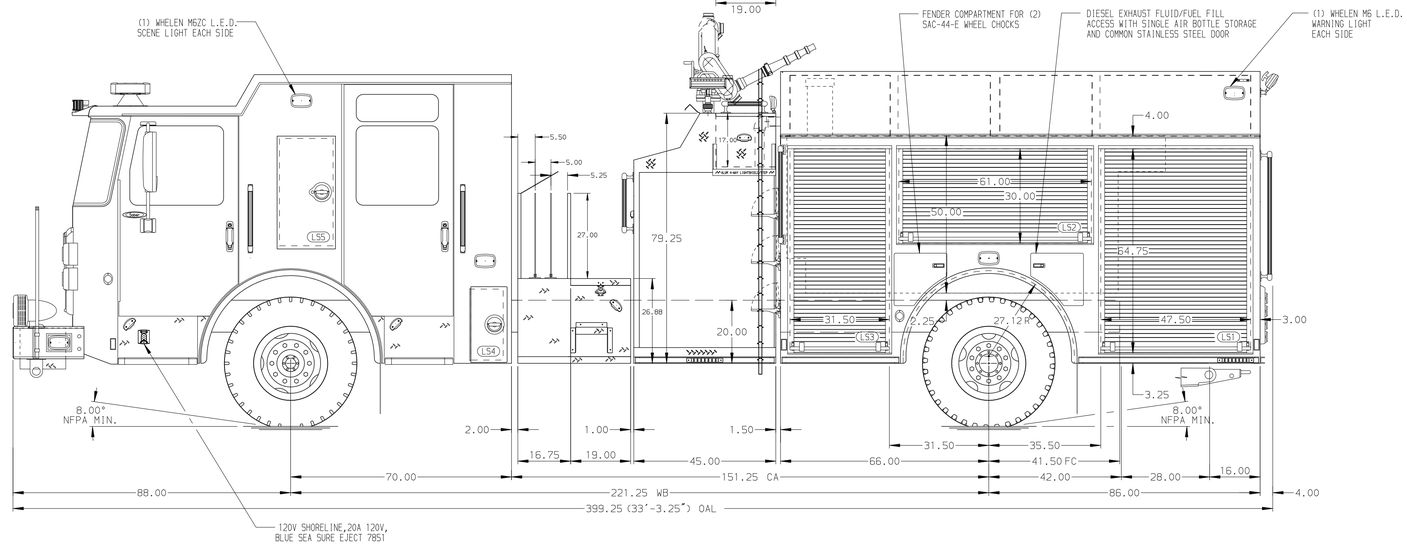

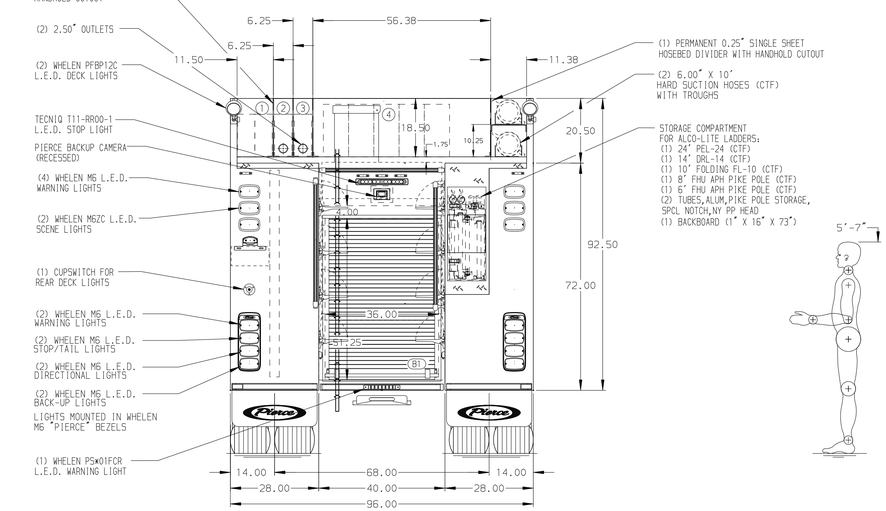

ALUMINUM BODY

MAXIMUM O.A.L. 399.25"

MAXIMUM O.A.H. 123"

NOTE

DIMENSIONS SHOWN ARE APPROXIMATE AND ARE SUBJECT TO MINOR DEVIATIONS AS MAY OCCUR OR BE NECESSARY IN CONSTRUCTION.
MINOR DETAILS NOT SHOWN.

REV	DATE	BY	CH
B	17DEC25	TYB	CCS
A	12SEP25	RHU	CCS

CHASSIS DATA
MAKE: PIERCE
MODEL: SABER FR

TITLE: 2000 GPM, 750 GALLON WATERTANK
152" 2G PUMPER, MUX

FOR: HILLSBOROUGH COUNTY FIRE RESCUE
TAMPA, FLORIDA

DWG NO.: 41300AD-SH1

Pierce MANUFACTURING INC.

JOB NO.	41300 01-05
SCALE	1:24
DATE	
DRAWN BY	JAM 24JUL25
CHECKED BY	JJR 31JUL25
SHEET SIZE	D
SHEET NO.	1 OF 1