PUMPER

BODY
Long Aluminum 2nd Gen Pumper

CHASSIS
Saber FR Chassis

CHASSIS

AXLE, FRONT, CUSTOM
18,000 lb Dana Axle

AXLE, REAR
27,000 lb Dana Axle

ENGINE
450 HP Cummins L9 Engine

TRANSMISSION
Allison 6th Gen, 3000 EVS P

BUMPER
19" Extended Painted Steel

CAB
7010 Saber FR Cab

BODY

TOTAL TANK CAPACITY
750 Gallon Poly Water Tank

WATER CAPACITY
750 Gallons of Water

FOAM CELL
Foam Cell Not Required

COMPT, PUMPER, REAR
37.75" FF Rollup Rear Compt

COMPT, PUMPER, LEFT SIDE
161" Rollup Full Height Front & Rear FDLER

COMPT, PUMPER, RIGHT SIDE
161" Rollup Full Height Front & Rear FDLER

FIRE SUPPRESSION

PUMPHOUSE
52" Control Zone Side Mount

PUMP
1500 GPM Hale QMAX

CROSSLAYS, 1.50"
(2) 1.50" Standard Capacity

CROSSLAYS, 2.50"
(1) 2.50" Standard Capacity

SPEEDLAYS
Speedlays Not Required

GENERATOR
Generator Not Required

FOAM SYSTEM
Foam System Not Required

SAFETY

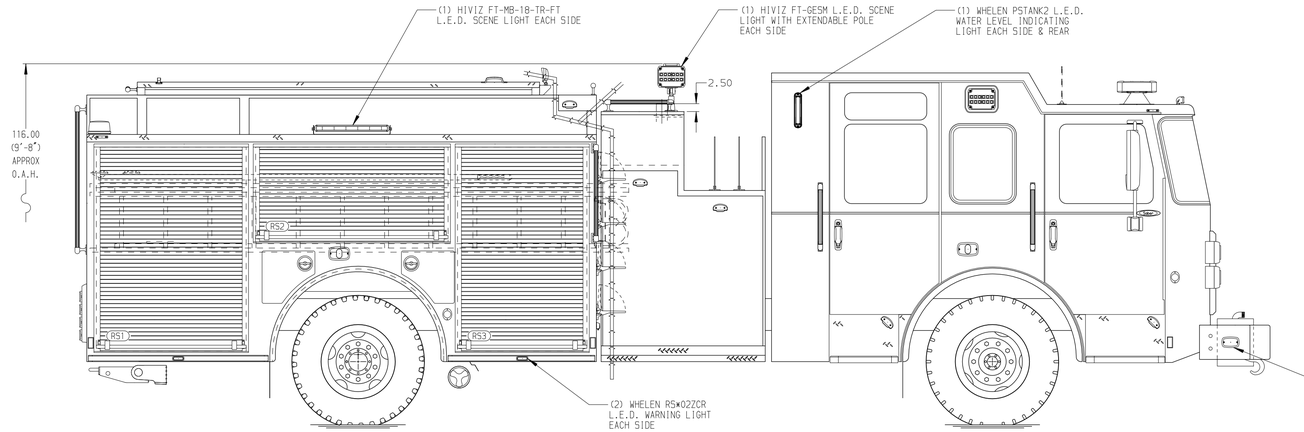

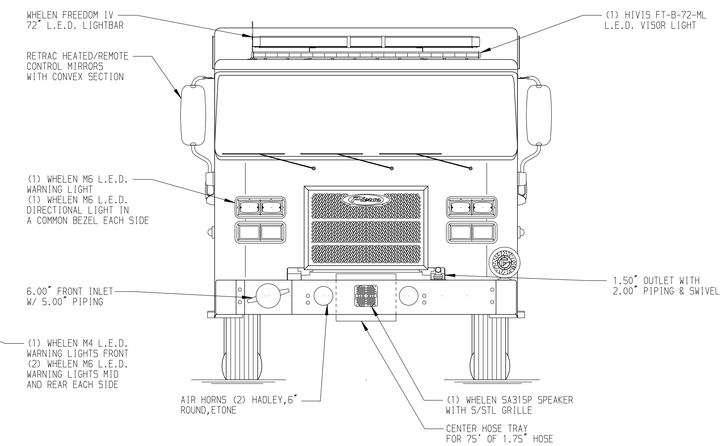

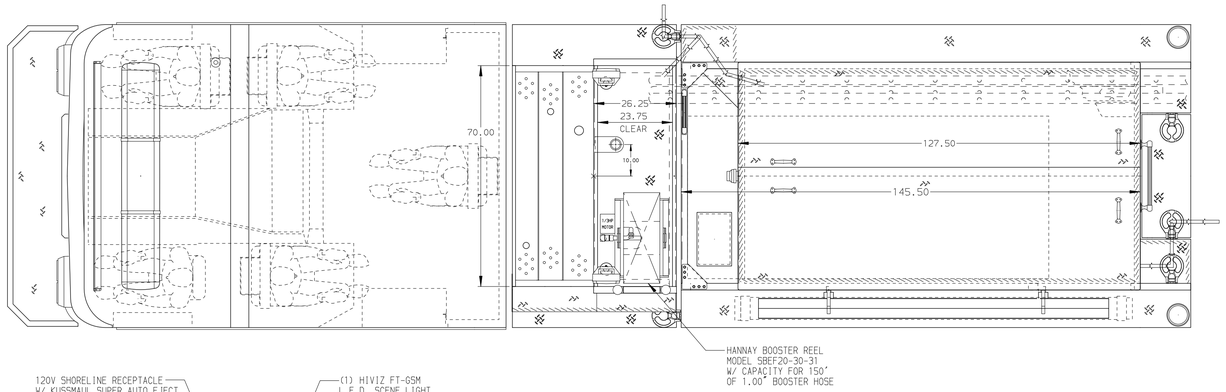

HOSEBED CAPACITY

BED 1
300' OF 1.75" D.J. POLY HOSE

BED 2
200' OF 1.75" D.J. POLY HOSE

BED 3
600' OF 5.00" D.J. POLY HOSE

BED 4
600' OF 2.50" D.J. POLY HOSE

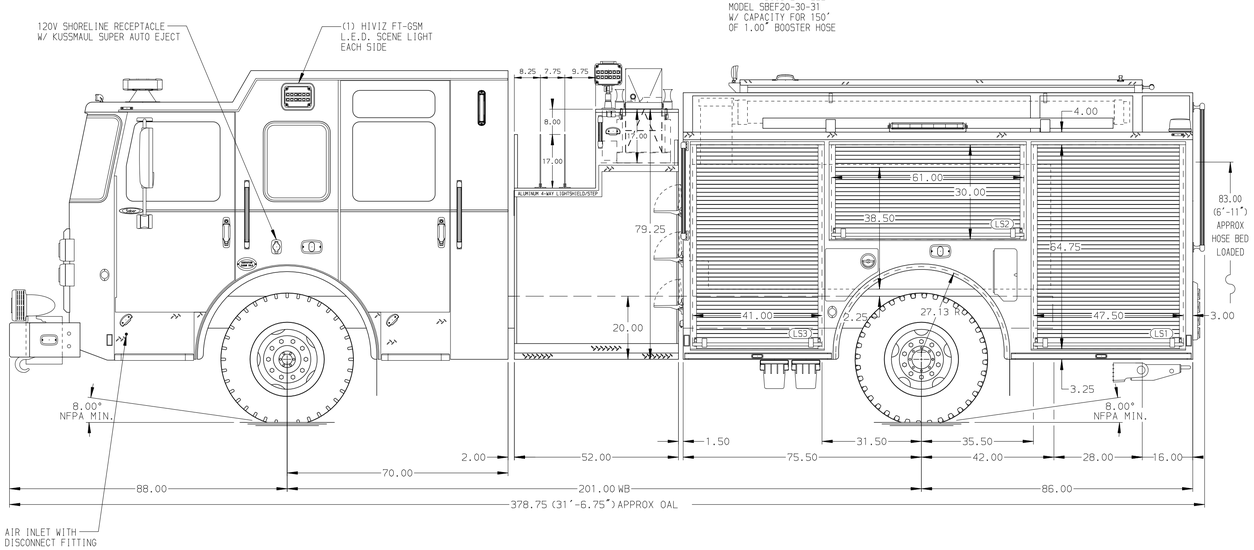

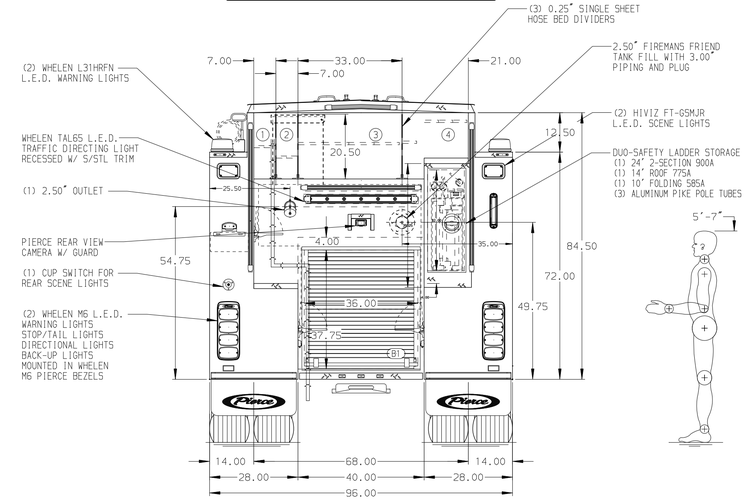

MAXIMUM O.A.L. - 384.00"

NOTE
DIMENSIONS SHOWN ARE APPROXIMATE AND ARE SUBJECT TO MINOR DEVIATIONS AS MAY OCCUR OR BE NECESSARY IN CONSTRUCTION.
MINOR DETAILS NOT SHOWN.

REV	DATE	BY	CH
B	13MAR25	VHO	CCS
A	08JAN25	ADP	CCS

CHASSIS DATA
MAKE: PIERCE
MODEL: SABER FR

Pierce MANUFACTURING INC.

TITLE	Pierce Pumper Approval Drawing -
FOR	Staton House Fire and Rescue -
DWG NO.	41306AD
JOB NO.	41306
SCALE	1:24
DRAWN BY	VHO
DATE	30SEP24
CHECKED BY	MMF
DATE	01OCT24
SHEET SIZE	D
SHEET NO.	1 OF 1

View File Created 14-MAR-2025 09:01:54