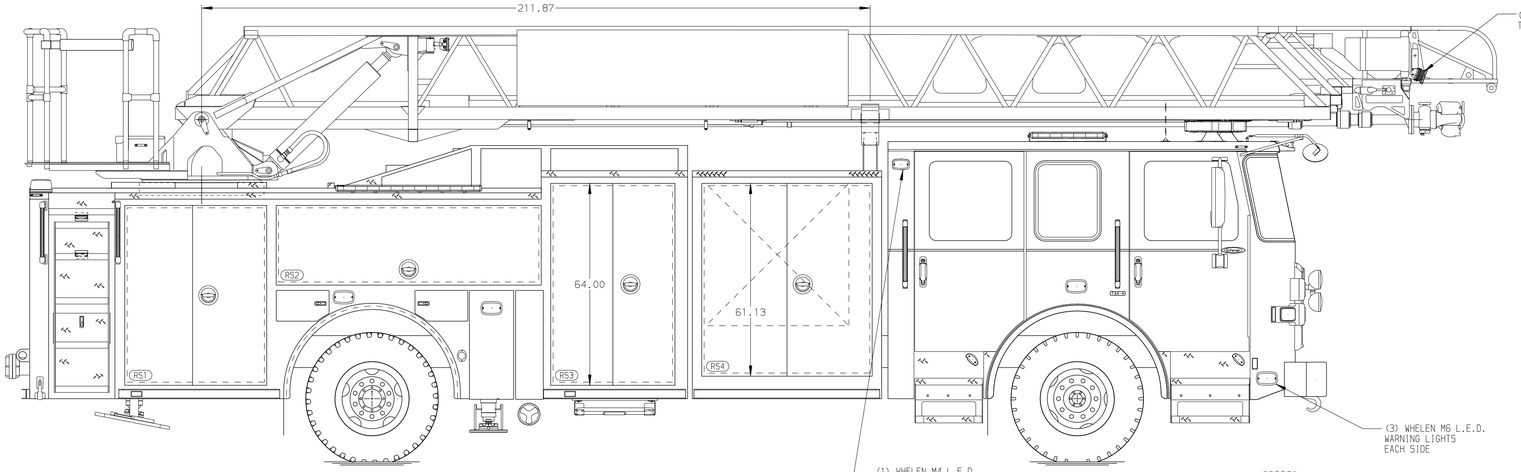

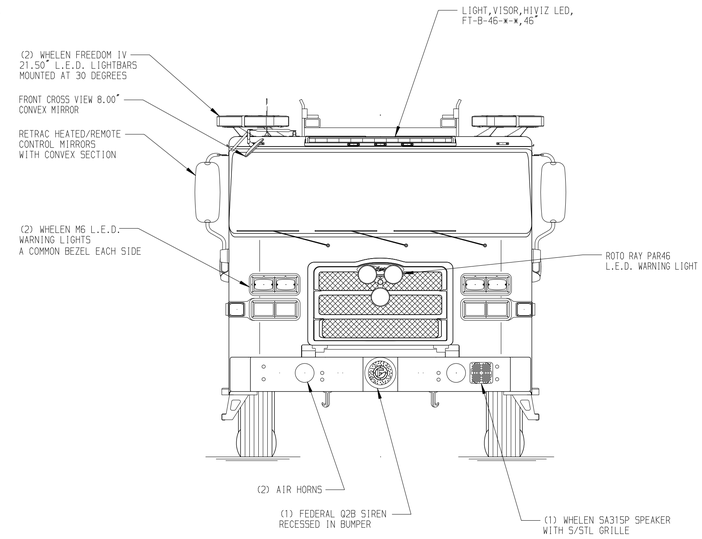

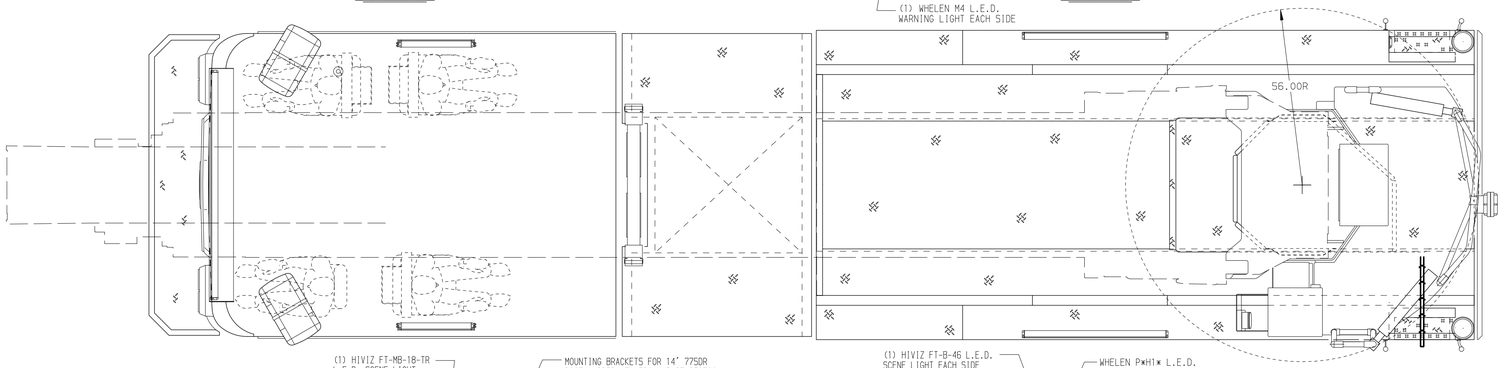

BODY	WATER TANK
107' ASL Aluminum Body	Water Tank Not Required
COMPT,LEFT SIDE FRONT	Foam System
Full Height Lap Forward	Foam System Not Required
COMPT,LEFT SIDE REAR	Foam Cell
Full Height Lap Rearward	Foam Cell Not Required
COMPT,RIGHT SIDE FRONT	
Full Height Lap Forward	
COMPT,RIGHT SIDE REAR	
Full Height Lap Rearward	

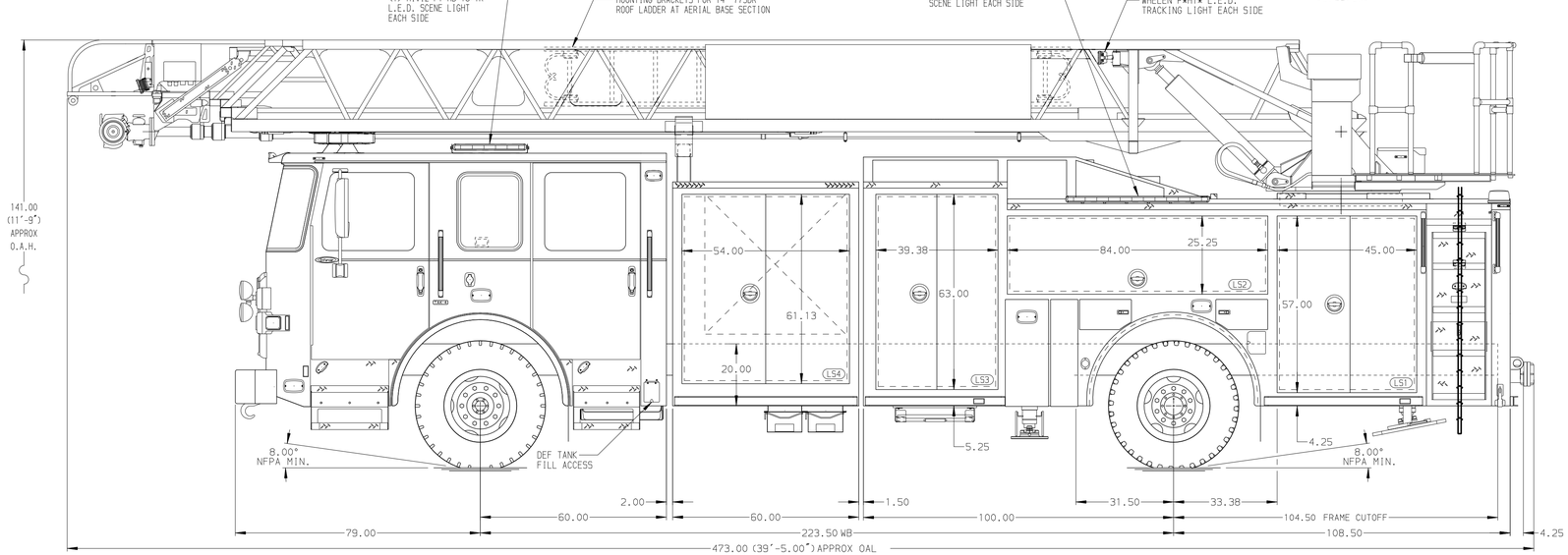

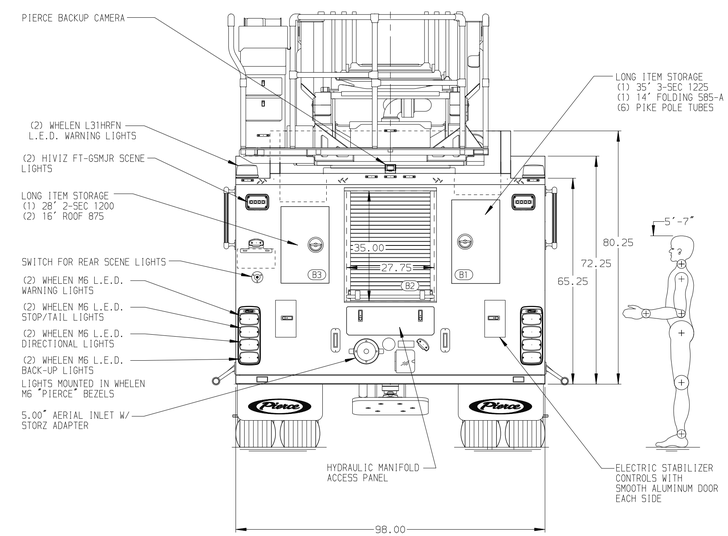

CHASSIS	CAB	AXLE,FRONT,CUSTOM	TRANSMISSION	COMPARTMENT-NO PUMP	
Enforcer Chassis	6000 Enforcer Cab	19,500 Lb TAK-4 Axle	ALLison 6th Gen, 4000 EVS P	60" Wide w/Double Doors	-
ENGINE	BUMPER	AXLE,REAR	GENERATOR		-
510 HP Paccar MX13 Engine	10" Extended Painted Steel	33,500 Lb Meritor Axle	Generator Not Required		-

NOTE

DIMENSIONS SHOWN ARE APPROXIMATE AND ARE SUBJECT TO MINOR DEVIATIONS AS MAY OCCUR OR BE NECESSARY IN CONSTRUCTION.
MINOR DETAILS NOT SHOWN.

1. NO LIMITED RETRACTION REQUIRED
2. RUNG LIGHTING ON AERIAL LADDER
3. SHORELINE RECEPTACLE WITH KUSSMAUL SUPER AUTO-EJECT LOCATED ON DRIVER SIDE OF THE CAB
4. AIR INLET WITH DISCONNECT COUPLING IN THE DRIVER SIDE STEPWELL
5. BATTERY CHARGER LOCATED IN CAB BEHIND DRIVER SEAT
6. BATTERY CHARGE INDICATOR DISPLAYED THROUGH WINDOW BEHIND DRIVERS SEAT
7. FOUR ADJUSTABLE SHELVES LOCATED IN COMPARTMENTS PER ORDER
8. ONE ALUMINUM SLIDE-OUT TOOLBOARD LOCATED IN COMPARTMENT PER ORDER
9. DRI-DECK MATTING ON COMPARTMENT SHELVES & FLOORS PER ORDER
10. TWO RECEPTACLE STRIPS LOCATED PER ORDER
11. 1500 GPM HIGH FLOW WATERWAY
12. LIFTING EYE ROPE RESCUE ATTACHMENT AT AERIAL TIP
13. NON-RAISED AERIAL PEDESTAL
14. DC POWER TO AERIAL TIP

REV	DATE	BY	CH
7	27FEB25	LWE	KBO
6	30JAN25	LWE	KBO
5	13DEC24	LWE	KBO

CHASSIS DATA
MAKE: PIERCE
MODEL: ENFORCER

Pierce MANUFACTURING INC.

TITLE: 107' ASCENDANT AERIAL LADDER AND BODY ASSEMBLY
-
FOR: OMAHA FIRE DEPARTMENT
OMAHA, NE
DWG NO.: 41422AD

JOB NO.	41422
SCALE	1:24
DATE	
DRAWN BY	LWE 27SEPT24
CHECKED BY	KBO 18OCT24
SHEET SIZE	D
SHEET NO.	1 OF 1

View File Created 05-MAR-2025 13:45:11