RIGHT SIDE COMPARTMENTS CONTAIN THE FOLLOWING:

COMPARTMENT RS1 CONTAINS:
- (1) HORIZONTAL FLOOR EXTENSION
- (1) TRANSVERSE VERTICAL DIVIDER
- (2) 2-WAY ADJ SLIDE OUT TRAYS
- (1) FLOOR MOUNTED TRAY
- (2) 2-WAY FLOOR MOUNTED SLIDE OUT TRAYS
- (1) 2-WAY FLOOR MTD SLIDE OUT TOOLBOARD
-

COMPARTMENT RS2 CONTAINS:
- (1) 2-WAY FLOOR MOUNTED SLIDE OUT TRAY
-
-
-

COMPARTMENT RS3 CONTAINS:
- (1) VERTICAL X-VERSE COMPARTMENT DIVIDER
- (1) 2-WAY FLOOR MTD SLIDE OUT TOOLBOARD
- (1) 2-WAY FLOOR MOUNTED SLIDE OUT TRAY WITH TOOLBOARD
-

COMPARTMENT RS4 CONTAINS:
- (1) ELECTRIC CORD REEL WITH 200' OF 10/4 YELLOW CORD
- (1) BREATHING AIR BOOSTER PUMP
- (1) CASCADE SYSTEM CONTROL PANEL
- (1) "SPACESAVER" 2-BOTTLE FILL ENCLOSURE
- (1) RACK FOR 5 SCBA BOTTLES
- (1) 15/20A,120V 4-PLACE RECEPTACLE

COMPARTMENT RS5 CONTAINS:
- (1) CAB LIFT CONTROLLER
- (2) STD DEPTH ADJ SLIDE OUT/TILT TRAYS
- (1) FLOOR MOUNTED TRAY
-
-
-

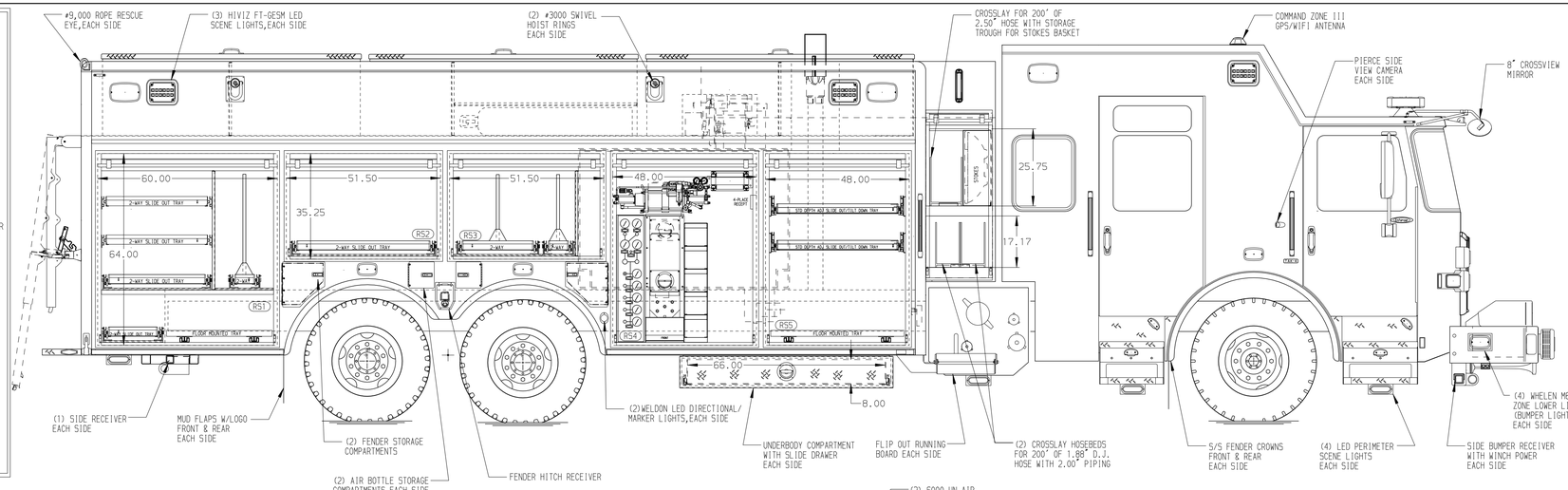

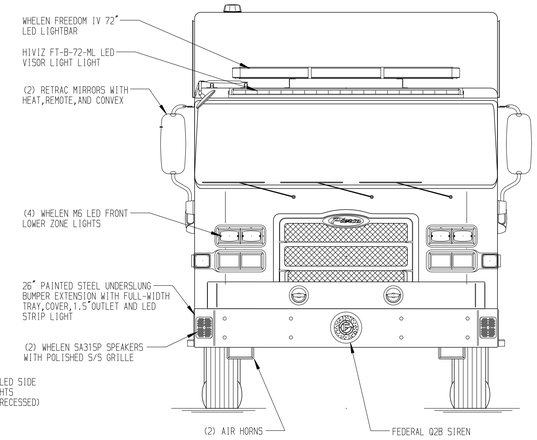

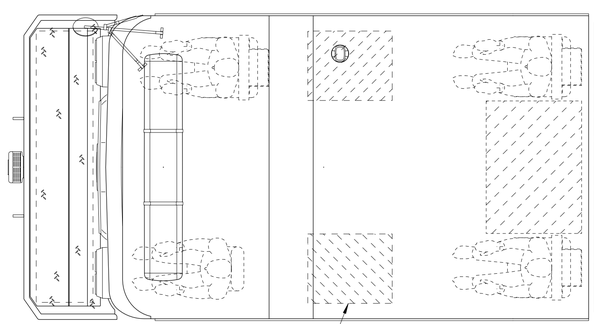

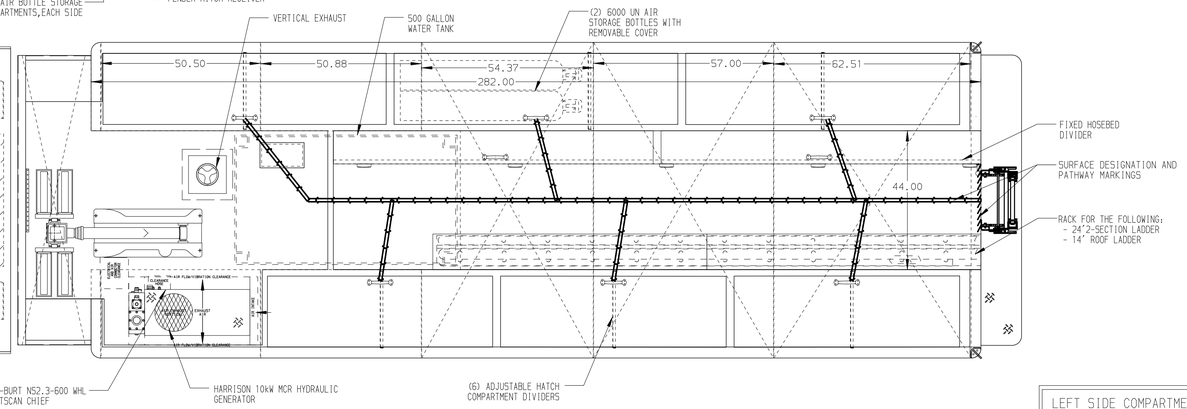

HOSEBED CAPACITY
(A) - 500' OF 5.00" HOSE

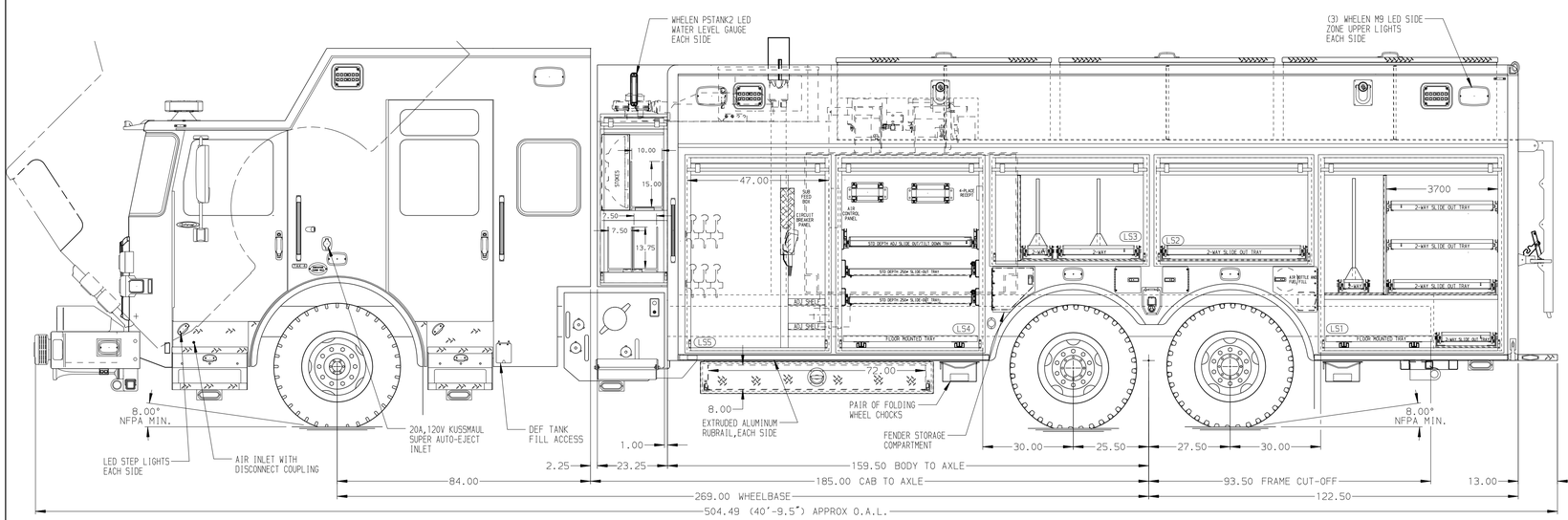

LEFT SIDE COMPARTMENTS CONTAIN THE FOLLOWING:

COMPARTMENT LS1 CONTAINS:
- (1) HORIZONTAL FLOOR EXTENSION
- (1) TRANSVERSE VERTICAL DIVIDER
- (2) 2-WAY ADJ SLIDE OUT TRAYS
- (1) FLOOR MOUNTED TRAY
- (2) 2-WAY FLOOR MOUNTED SLIDE OUT TRAYS
- (1) 2-WAY FLOOR MTD SLIDE OUT TOOLBOARD

COMPARTMENT LS2 CONTAINS:
- (1) 2-WAY FLOOR MOUNTED SLIDE OUT TRAY
-
-
-

COMPARTMENT LS3 CONTAINS:
- (1) VERTICAL TRANSVERSE COMPARTMENT DIVIDER
- (1) 2-WAY FLOOR MTD SLIDE OUT TOOLBOARD
- (1) 2-WAY FLOOR MOUNTED SLIDE OUT TRAY WITH TOOLBOARD
-
-

COMPARTMENT LS4 CONTAINS:
- (2) STD DEPTH ADJ SLIDE OUT TRAYS
- (1) STD DEPTH ADJ SLIDE OUT/TILT TRAY
- (1) FLOOR MOUNTED TRAY
- (1) ELECTRIC CORD REEL WITH 200' OF 10/4 YELLOW CORD
- (1) LOW PRESSURE AIR REEL WITH 200' OF HOSE
- (1) REGULATOR AND GAUGES FOR REEL
- (1) 15/20A,120V 4-PLACE RECEPTACLE
-

COMPARTMENT LS5 CONTAINS:
- (1) CIRCUIT BREAKER PANEL
- (1) SUB FEED BOX
- (2) STD DEPTH ADJ SHELVES
- (1) NIGHT SCAN CONTROLLER
- (1) 75 AMP AUXILIARY POWER SUPPLY

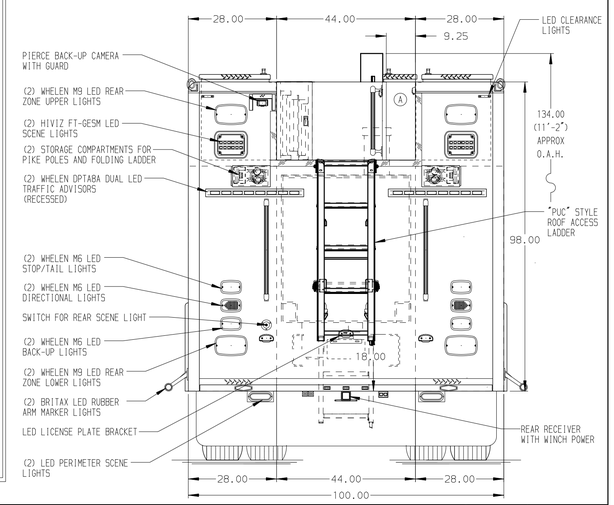

NOTE

DIMENSIONS SHOWN ARE APPROXIMATE AND ARE SUBJECT TO MINOR DEVIATIONS AS MAY OCCUR OR BE NECESSARY IN CONSTRUCTION.
MINOR DETAILS NOT SHOWN.

NOTES:
1. AIR OUTLET WITH SHUT-OFF VALVE LOCATED ON THE PUMP PANEL
2. FLOOR IN CAB AND CREW CAB TO BE LONSEAL, LONPLATE II VINYL FLOORING
3. PROGRESSIVE DYNAMICS PD2180 BATTERY CHARGER LOCATED BEHIND THE DRIVER'S SEAT
4. BATTERY CHARGE INDICATOR LOCATED ON DRIVER'S SEAT RISER
5. S/S GUARDS LOCATED ON ALL BODY ROLL-UP DOORS
6. PIERCE LED LIGHTS IN ALL BODY AND HATCH COMPARTMENTS
7. PIERCE 1500 GPM PUC-NG STYLE PUMP
8. 15/20A,120V DUPLEX RECEPTACLE LOCATED IN CENTER EMS CABINET
9. BRUSHED S/S SCUFFPLATE ON REAR OF RECESSED WALKWAY

CLEAR DOOR WIDTH KEY

AMDOR ROLL UP DOORS:	-2 1/4"
GORTITE ROLL UP DOORS:	-2 1/2"
PIERCE DOUBLE LAP DOORS:	-4 1/4"
PIERCE LIFT-UP LAP DOORS:	-1 1/2"

(EX: 60"F-F - 2 1/4"= 57 3/4" CLEAR)
(F-F)= FRAME TO FRAME

REV	DATE	BY	CH
1	10NOV25	DHE	AZU
2	25AUG25	DHE	AZU
3	29MAY25	DHE	GFI

CHASSIS DATA
MAKE: PIERCE
MODEL: EN8424

Pierce MANUFACTURING INC.

TITLE: HEAVY DUTY RESCUE
NON-WALKIN/PUC WITH 500 GALLON WATER TANK

FOR: THE VILLAGES COMMUNITY DEVELOPMENT DIST BID #804
TEN-8 FIRE & SAFETY ROBBIE WALLACE

DWG NO.: 41432AD

JOB NO.	41432
SCALE	1:24
DATE	
DRAWN BY	DHE 18MAR25
CHECKED BY	GFI 21MAR25
SHEET SIZE	D
SHEET NO.	1 OF 1

View File Created 11-NOV-2025 09:24:53