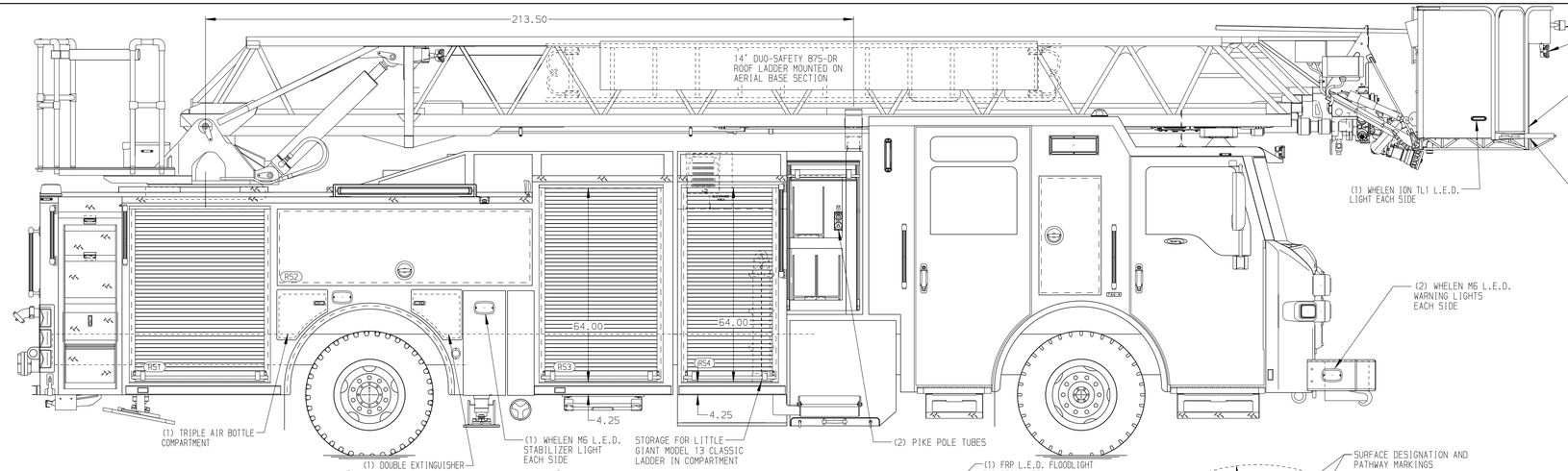

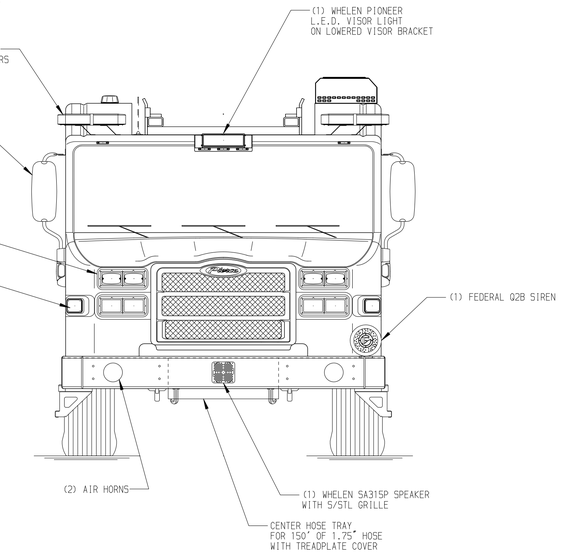

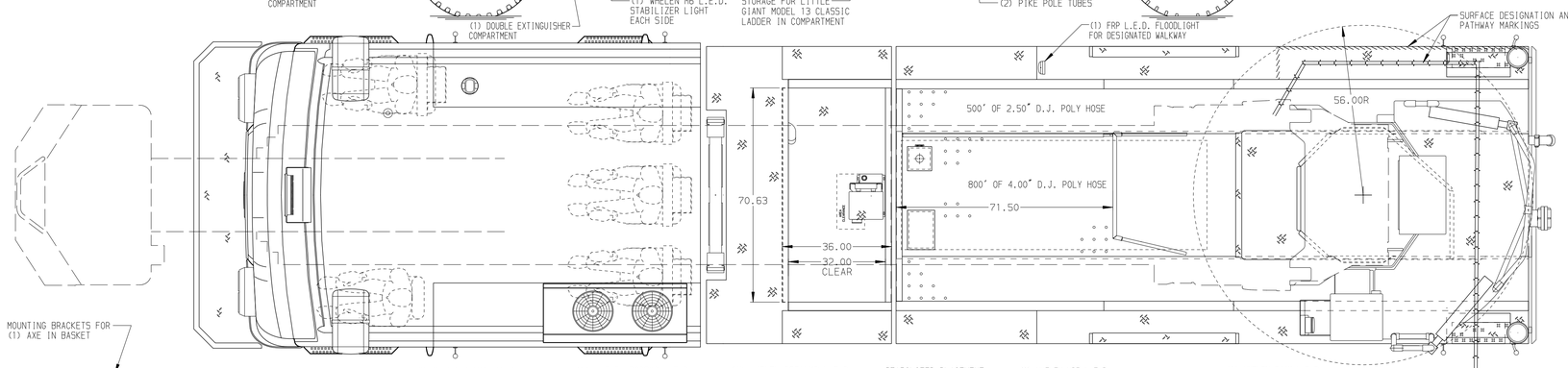

BODY	TOTAL TANK CAPACITY
110' Single Axle Platform Aluminum Body PUC	500 Gallon Poly Tank
COMPT,LEFT SIDE FRONT	WATER CAPACITY
Full Height Rollup Forward	480 Gallons of Water
COMPT,LEFT SIDE REAR	FOAM CELL CAPACITY
Full Height Roll/Lift Rearward	20 Gallon Foam Cell
COMPT,RIGHT SIDE FRONT	FOAM SYSTEM
Full Height Roll/Lift Forward	Husky 3 Single Agent Foam System
COMPT,RIGHT SIDE REAR	
Full Height Rollup Rearward	

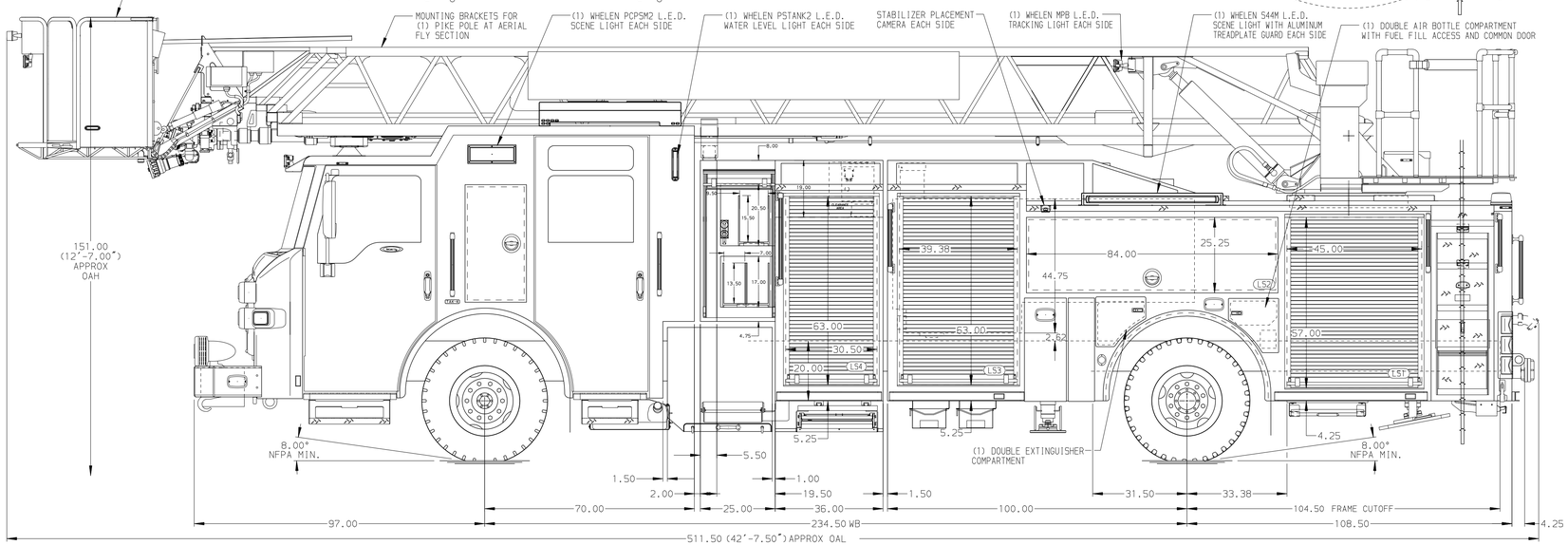

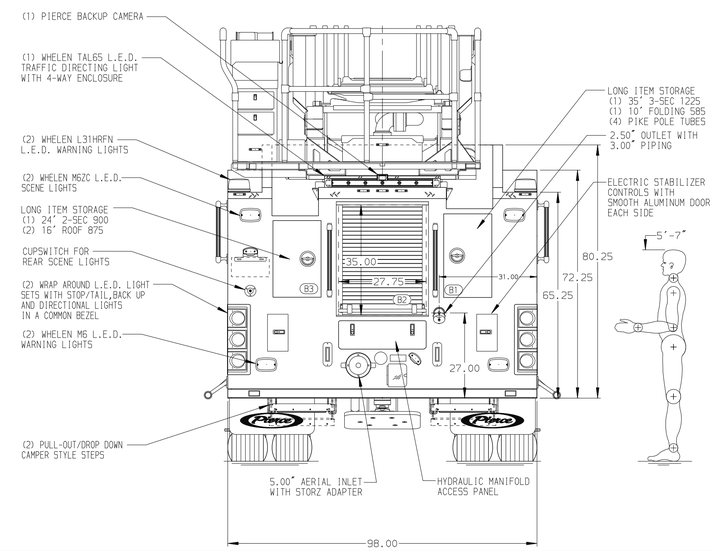

CHASSIS	CAB	ELECTRICAL SYSTEM	AXLE,FRONT,CUSTOM	PUMPHOUSE	CROSSLAYS,1.50"	SPEEDLAYS	SAFETY
Velocity Chassis (Big Block)	7010 Notched Velocity FR Cab,PUC	MUX	24,000 Lb TAK-4 Axle	Control Zone, PAL/PAP PUC	(2) 1.50", Poly Trays, 200'		Frontal Impact Protection
ENGINE	BUMPER	TRANSMISSION	AXLE,REAR	PUMP	CROSSLAYS,2.50"	GENERATOR	
510 HP Paccar MX13 Engine	19" Extended Painted Steel	Allison 6th Gen, 4000 EVS P	33,500 Lb Meritor Axle	2000 GPM Pierce PUC-NG	(1) 2.50", Poly Tray, 200'	Generator Not Required	

NOTE

DIMENSIONS SHOWN ARE APPROXIMATE AND ARE SUBJECT TO MINOR DEVIATIONS AS MAY OCCUR OR BE NECESSARY IN CONSTRUCTION.
MINOR DETAILS NOT SHOWN.

1. ONE 1.50 OUTLET WITH 2.00 PIPING AND SWIVEL LOCATED IN CENTER BUMPER TRAY
2. SHORELINE STRAIGHT BLADE RECEPTACLE LOCATED IN DRIVER SIDE STEPWELL
3. AIR INLET WITH DISCONNECT COUPLING IN THE DRIVER SIDE STEPWELL
4. BATTERY CHARGER LOCATED PER ORDER
5. BATTERY CHARGE INDICATOR LOCATED ON DRIVER SEAT RISER
6. EIGHT ADJUSTABLE SHELVES LOCATED IN COMPARTMENTS PER ORDER
7. THREE FLOOR MOUNTED SLIDE-OUT TRAYS LOCATED IN COMPARTMENTS PER ORDER
8. ONE CTECH FOUR-DRAWER CABINET LOCATED IN COMPARTMENT PER ORDER
9. ONE SWING-OUT TOOLBOARD LOCATED IN COMPARTMENT PER ORDER
10. ONE VERTICAL PARTITION LOCATED IN COMPARTMENT PER ORDER
11. ONE ZICO SCBA BRACKET LOCATED IN COMPARTMENT PER ORDER
12. TURTLE TILE MATTING LOCATED ON COMPARTMENT SHELVES & FLOORS PER ORDER
13. FIVE RECEPTACLES LOCATED PER ORDER
14. 1250 GPM HIGH FLOW WATERWAY
15. TECNIQ 4-SECTION RUNG LIGHTING AT AERIAL DEVICE
16. LEVEL 2 COLD CLIMATE PACKAGE

MAX O.A.H. = 12'-9.00" (153.00")

REV	DATE	BY	CH
1	16DEC25	ANZ	SJS
0	18AUG25	ANZ	SJS
A	04JUN25	ANZ	SJS

CHASSIS DATA
MAKE: PIERCE
MODEL: VELOCITY

Pierce MANUFACTURING INC.

TITLE: 110' ASCENDANT AERIAL PLATFORM AND BODY ASSEMBLY
FOR: CITY OF VADNAIS HEIGHTS
VADNAIS HEIGHTS, MN
DWG NO.: 41445AD

JOB NO.	41445
SCALE 1:24	DATE
DRAWN BY ANZ	01APR25
CHECKED BY JLO	11APR25
SHEET SIZE D	SHEET NO. 1 OF 1

View File Created 17-DEC-2025 08:43:12