RIGHT SIDE COMPARTMENTS CONTAIN THE FOLLOWING:

COMPARTMENT RS1 CONTAINS:
- (1) RACK FOR 5 SCBA BOTTLES
- (1) VERTICAL COMPARTMENT DIVIDER
- (1) STD DEPTH ADJ SHELF
- (1) CASCADE SYSTEM CONTROL PANEL
- (1) 'SPACESAVER' 2-BOTTLE FILL ENCLOSURE
- (1) TOOL AIR REEL W/200' OF BLUE HOSE
- (1) SLIDE OUT ROLLER GUIDE
- (1) FLOOR MOUNTED SLIDEMASTER TRAY

COMPARTMENT RS2 CONTAINS:
- (1) RACK FOR 7 AIR BAGS

COMPARTMENT RS3 CONTAINS:
- (1) HORIZONTAL FLOOR EXTENSION
- (3) 2-WAY ADJ SLIDEMASTER TRAYS WITH TOOLBOARDS
- (1) ROLLER ON COMPARTMENT FLOOR

COMPARTMENT RS4 CONTAINS:
- (1) HORIZONTAL FLOOR EXTENSION
- (1) 1/2 DEPTH ADJ SHELF
- (2) 1/2 DEPTH ADJ SLIDEMASTER TILT TRAYS
- (1) 2-WAY FLOOR MTD SLIDEMASTER TRAY

COMPARTMENT RS5 CONTAINS:
- (1) VERTICAL COMPARTMENT DIVIDER
- (1) 1/2 DEPTH ADJ SLIDEMASTER TILT TRAY
- (1) HORIZONTAL FLOOR EXTENSION
- (2) 2-WAY FLOOR MTD SLIDEMASTER TRAYS
- (2) FLOOR MOUNTED SLIDEMASTER TRAYS
- (1) CIRCUIT BREAKER PANEL
- (1) SUB FEED PANEL
- (1) GENERATOR METER PANEL
- (1) ELECTRIC CORD REEL WITH 200' OF 10/3 YELLOW CORD
- (1) SLIDE OUT ROLLER GUIDE
- (1) 15/20A, 120V DUPLEX RECEPTACLE

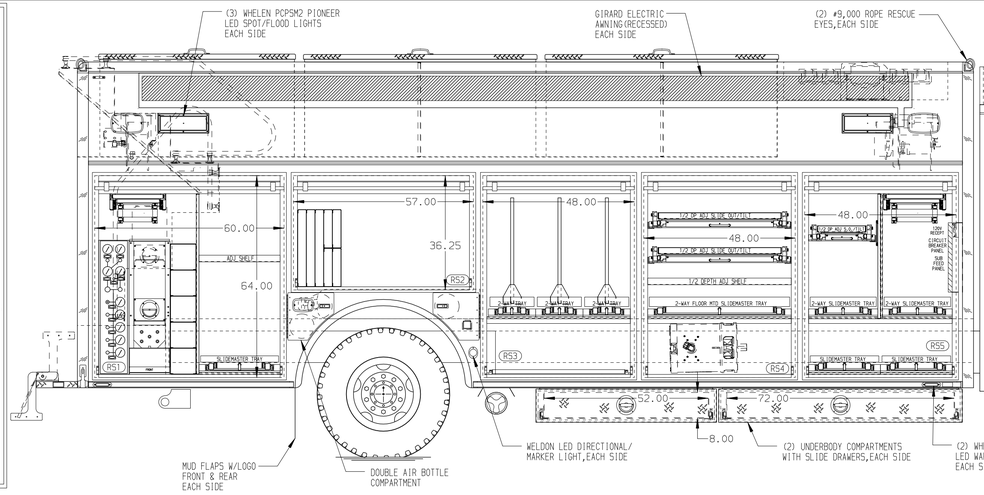

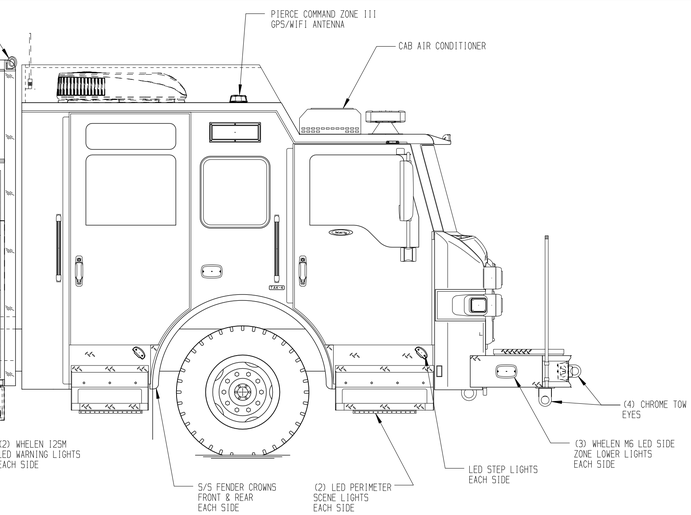

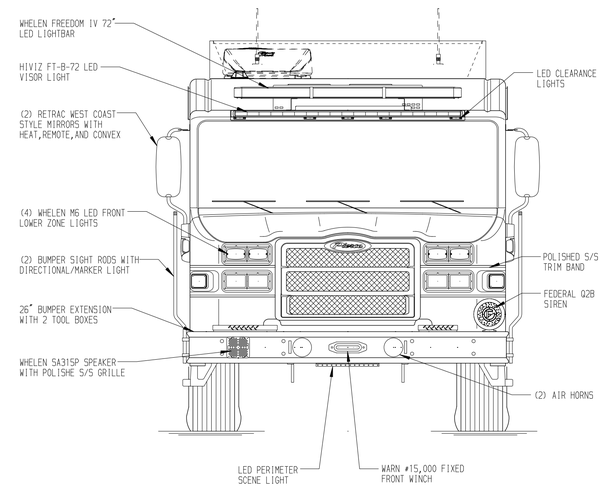

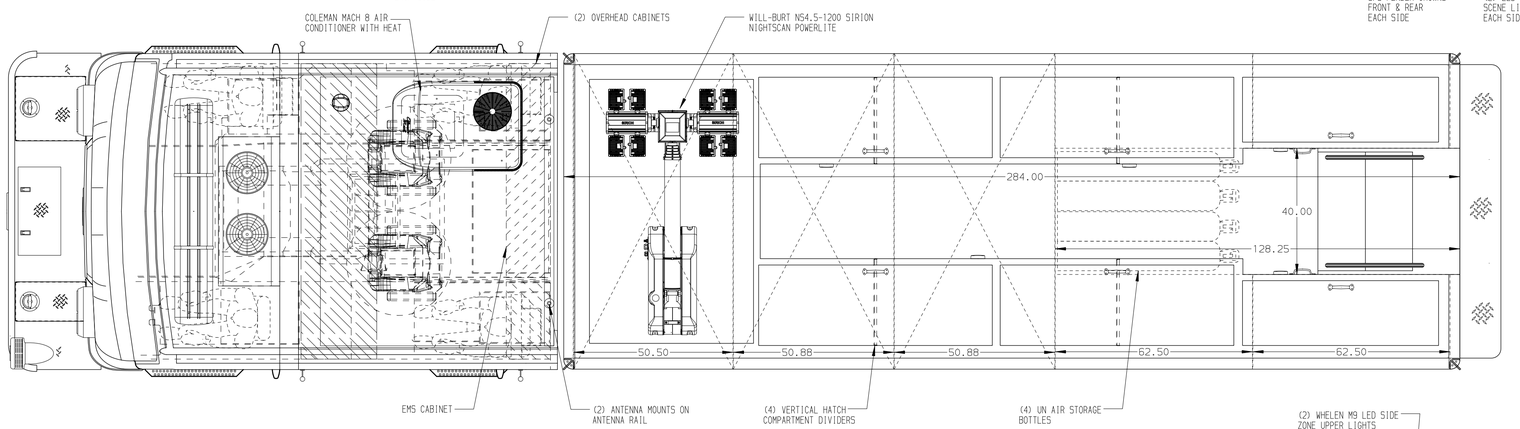

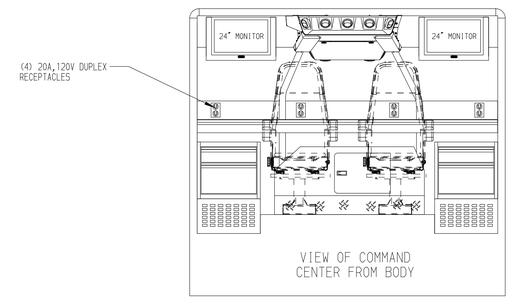

VIEW OF COMMAND CENTER FROM BODY

REAR COMPARTMENT CONTAINS THE FOLLOWING:

COMPARTMENT B1 CONTAINS:
- (1) 96"DP ADJ SLIDEMASTER TRAY WITH TOOLBOARD

COMPARTMENT B2 CONTAINS:
- (1) FLOOR MOUNTED SLIDEMASTER TRAY
-

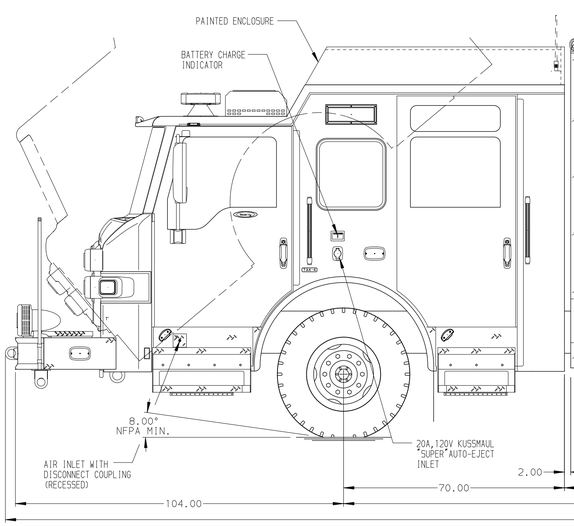

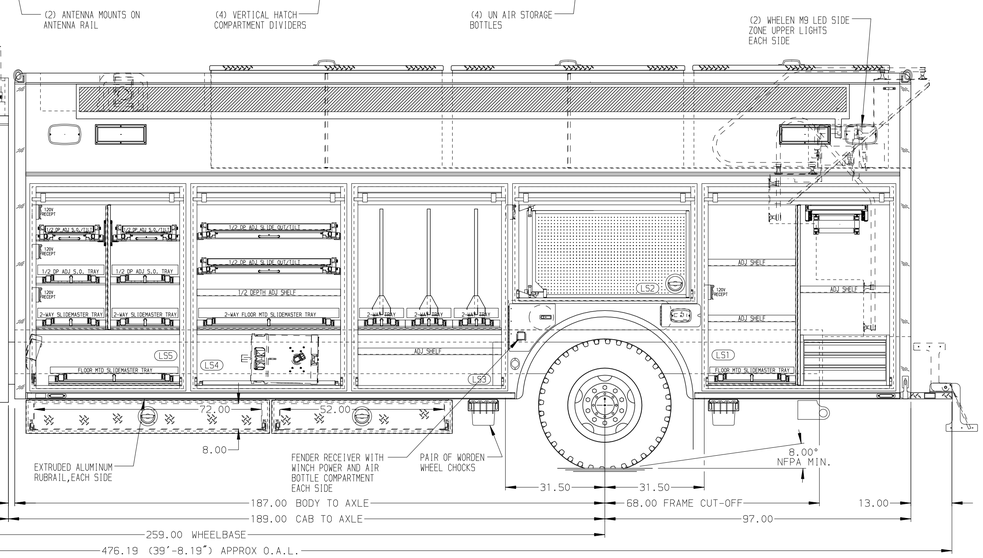

LEFT SIDE COMPARTMENTS CONTAIN THE FOLLOWING:

COMPARTMENT LS1 CONTAINS:
- (1) VERTICAL COMPARTMENT DIVIDER
- (3) STD DEPTH ADJ SHELVES
- (1) FLOOR MOUNTED SLIDEMASTER TRAY
- (1) 3-DRAWER C-TECH CABINET
- (1) ELECTRIC CORD REEL WITH 200' 10/4 YELLOW CORD
- (1) SLIDE OUT ROLLER GUIDE
- (1) 15/20A,120V DUPLEX RECEPTACLE

COMPARTMENT LS2 CONTAINS:
- (2) SWING OUT TOOLBOARDS
- PEGBOARD ON REAR WALL OF COMPARTMENT
- (1) 15/20A,120V DUPLEX RECEPTACLE

COMPARTMENT LS3 CONTAINS:
- (1) HORIZONTAL FLOOR EXTENSION
- (1) STD DEPTH ADJ SHELF
- (3) 2-WAY ADJ SLIDEMASTER TRAYS WITH TOOLBOARDS

COMPARTMENT LS4 CONTAINS:
- (1) HORIZONTAL FLOOR EXTENSION
- (1) 1/2 DEPTH ADJ SHELF
- (2) 1/2 DEPTH ADJ SLIDEMASTER TILT TRAYS
- (1) 2-WAY FLOOR MTD SLIDEMASTER TRAY
- (1) ROLLER ON COMPARTMENT FLOOR

COMPARTMENT LS5 CONTAINS:
- (1) KUSSMAUL CHIEF 40AMP CHARGER
- (1) VERTICAL COMPARTMENT DIVIDER
- (1) HORIZONTAL FLOOR EXTENSION
- (2) 1/2 DEPTH ADJ SLIDEMASTER TRAYS
- (2) 1/2 DEPTH ADJ SLIDEMASTER TILT TRAYS
- (2) 2-WAY FLOOR MTD SLIDEMASTER TRAYS
- (1) FLOOR MOUNTED SLIDEMASTER TRAY
- (1) NIGHT SCAN CONTROLLER
- (3) 15/20A,120V DUPLEX RECEPTACLES

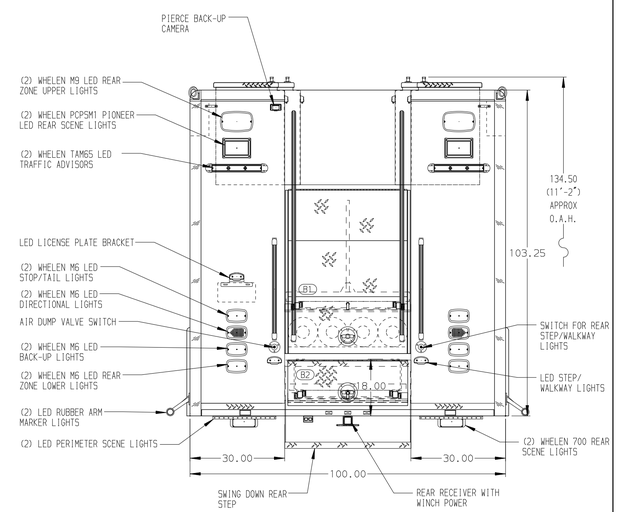

NOTE

DIMENSIONS SHOWN ARE APPROXIMATE AND ARE SUBJECT TO MINOR DEVIATIONS AS MAY OCCUR OR BE NECESSARY IN CONSTRUCTION.
MINOR DETAILS NOT SHOWN.

NOTES:
1. HARRISON 35kW SINGLE PHASE PTO DRIVEN GENERATOR WITH SPLASH GUARD LOCATED BETWEEN THE FRAME RAILS
2. POLISHED S/S SCUFFPLATES ON CAB AND CREW CAB DOOR JAMBS
3. FLOOR IN CAB AND CREW CAB TO BE PADDED RUBBER AND ALUMINUM TREADPLATE
4. BRUSHED S/S SCUFFPLATES ON ALL BODY CORNERS
5. PULL STRAPS ON ALL ROLL-UP DOORS AND REAR STAIRWELL DOOR
6. S/S GUARDS ON ALL BODY ROLL-UP DOORS
7. PIERCE LED STRIP LIGHTS IN ALL BODY AND HATCH COMPARTMENTS
8. 20A,120V 6-PLACE RECEPTACLES LOCATED ON ENGINE TUNNEL AND EMS CABINET

SIDE ROLL AND FRONTAL IMPACT PROTECTION

CLEAR DOOR WIDTH KEY

ARMOR ROLL UP DOORS:	-2 1/4"
GORTITE ROLL UP DOORS:	-2 1/2"
PIERCE DOUBLE LAP DOORS:	-4 1/4"
PIERCE LIFT-UP LAP DOORS:	-1 1/2"
(EX: 60"F-F - 2 1/4"- 57 3/4" CLEAR) (F-F)= FRAME TO FRAME	

REV	DATE	BY	CH
4	04DEC25	DHE	AZU
3	09SEP25	DHE	AZU

CHASSIS DATA	
MAKE	PIERCE
MODEL	VXFR7010
DWG NO.	41446AD

Pierce MANUFACTURING INC.

TITLE: HEAVY DUTY RESCUE NON-WALKIN

FOR: IDAHO NATIONAL LABORATORY, BEA — BID #1074
PIERCE DIRECT — SCOTT HANAMANN

JOB NO.	41446
SCALE	1:24
DATE	
DRAWN BY	DHE
DATE	05MAY25
CHECKED BY	GFI
DATE	9MAY25
SHEET SIZE	D
SHEET NO.	1 OF 1

View File Created 04-DEC-2025 13:08:25