# PUMPER, PUC

## BODY
Pumper, PUC, Aluminum

## CHASSIS
Enforcer Chassis, PUC

## ELECTRICAL SYSTEM
MUX

# CHASSIS

## AXLE, FRONT, CUSTOM
19,500 Lb TAK-4 Axle

## AXLE, REAR
31,000 Lb Dana Axle

## ENGINE
510 HP Paccar MX13 Engine

## TRANSMISSION
Allison 6th Gen, 4000 EVS P

## BUMPER
19" Extended Painted Steel

## CAB
7010 Enforcer Cab, PUC

# BODY

## TOTAL TANK CAPACITY
1000 Gallon Poly Tank

## WATER CAPACITY
1000 Gallons of Water

## FOAM CELL CAPACITY
Foam Cell Not Required

## COMPT, PUMPER, REAR
40.50" FF Rollup Rear Compt w/Tailboard, PUC

## COMPT, PUMPER, LEFT SIDE
189" Rollup Full Height & Depth Front & Rear, PUC

## COMPT, PUMPER, RIGHT SIDE
189" Rollup Full Height & Depth Front & Rear, PUC

# FIRE SUPPRESSION

## PUMPHOUSE
Control Zone, PUC

## PUMP
1500 GPM Pierce PUC

## CROSSLAYS, 1.50"
(2) 1.50", Poly Trays, 200'

## CROSSLAYS, 2.50"
(1) 2.50", Poly Tray, 200'

## SPEEDLAYS
Speedlays Not Required

## GENERATOR
Generator Not Required

## FOAM SYSTEM
Foam System Not Required

# SAFETY

Side Roll and Frontal Impact Protection

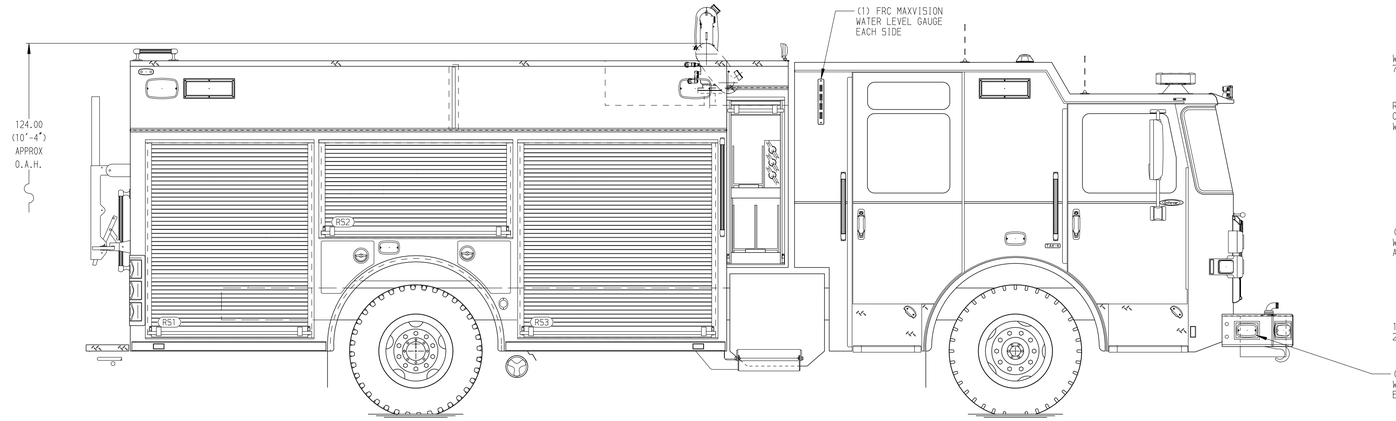


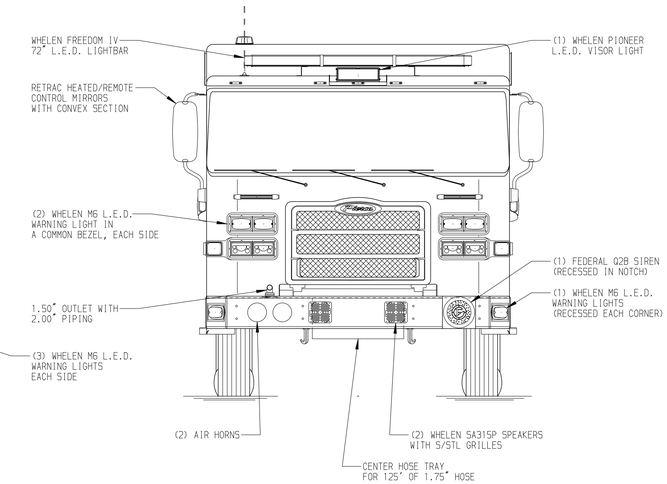


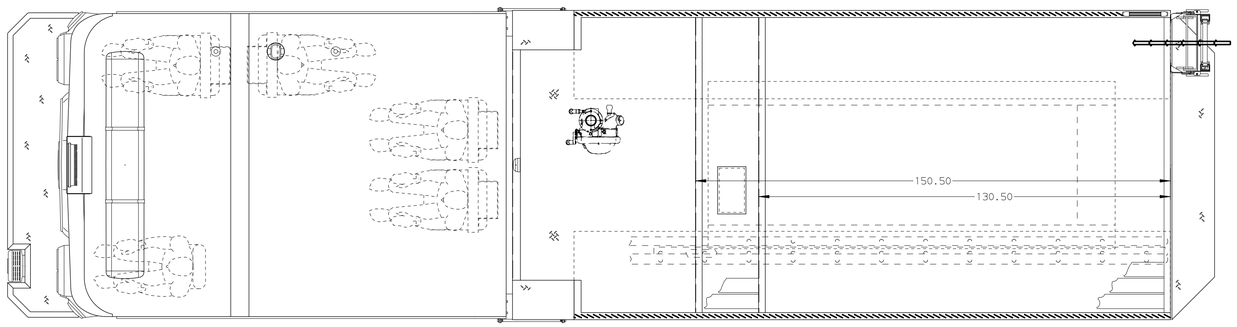


HOSEBED CAPACITIES
1. 1000' OF 5.00" KEY HOSE
2. 1000' OF 3.00" KEY HOSE
3. 250' OF 2.50" KEY HOSE

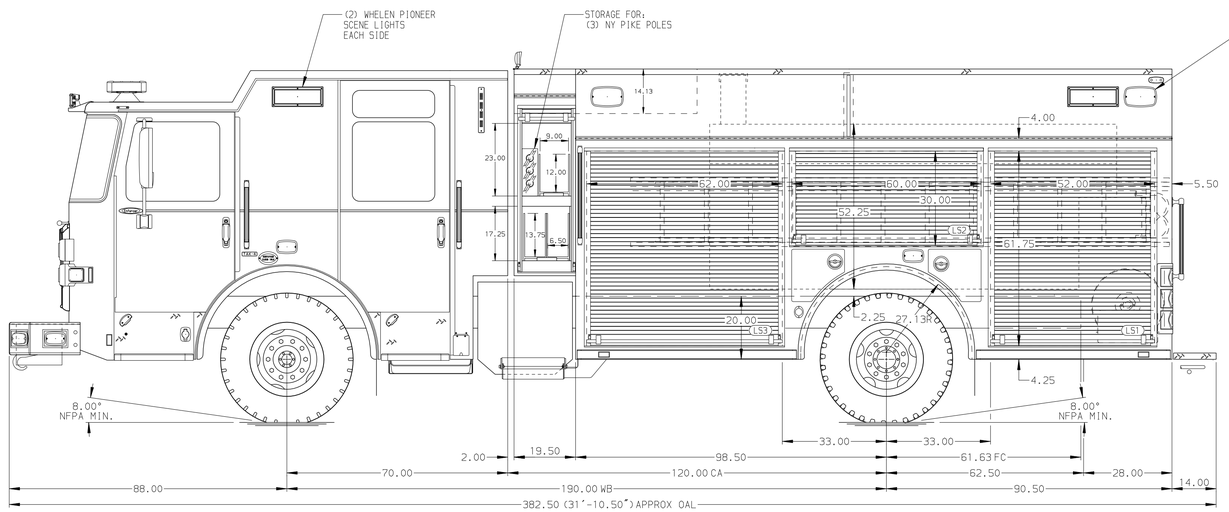


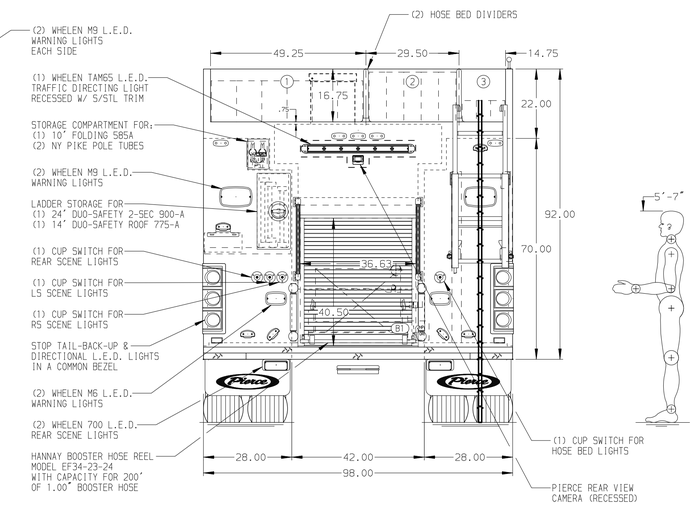


NOTE

DIMENSIONS SHOWN ARE APPROXIMATE AND ARE SUBJECT TO MINOR DEVIATIONS AS MAY OCCUR OR BE NECESSARY IN CONSTRUCTION.
MINOR DETAILS NOT SHOWN.

1. SHORELINE RECEPTACLE WITH KUSSMAUL SUPER AUTO-EJECT LOCATED IN DRIVER SIDE STEPWELL REARWARD
2. AIR INLET WITH DISCONNECT COUPLING IN THE DRIVER SIDE STEPWELL
3. BATTERY CHARGER LOCATED PER ORDER
4. BATTERY CHARGE INDICATOR LOCATED ON THE DRIVER SIDE SEAT RISER
5. SIX ADJUSTABLE SHELVES LOCATED PER ORDER
6. ONE FLOOR MOUNTED SLIDE-OUT TRAY LOCATED PER ORDER
7. THREE TILT/SLIDE-OUT TRAYS LOCATED IN COMPARTMENTS PER ORDER
8. ONE SWING-OUT TOOLBOARD LOCATED IN COMPARTMENT PER ORDER
9. ONE VERTICAL PARTITION LOCATED PER ORDER
10. TWO POLY TOOL BOXES LOCATED PER ORDER
11. 6-SLOT AIR BAG RACK LOCATED PER ORDER
12. ONE PAIR OF WORDEN HWG-SB WHEEL CHOCKS TO BE SHIPPED LOOSE

| REV | DATE | BY | CH |
|---|---|---|---|
| 7 | 23DEC25 | JDA | TDC |
| 6 | 15DEC25 | JDA | TDC |
| 5 | 20NOV25 | JDA | TDC |

CHASSIS DATA
MAKE: PIERCE
MODEL: ENFORCER

Pierce MANUFACTURING INC.

| | | | |
|---|---|---|---|
| TITLE | Pierce PUC Pumper Approval Drawing<br>- | JOB NO. | 41447 |
| | | SCALE 1:24 | DATE |
| FOR | Arch Street Fire Department<br>- | DRAWN BY JDA | 09OCT25 |
| | | CHECKED BY MMF | 10OCT25 |
| DWG NO. | 41447AD | SHEET SIZE D | SHEET NO. 1 OF 1 |

View File Created 23-DEC-2025 12:53:55