PUMPER

BODY
Medium Aluminum 2nd Gen Pumper

CHASSIS
Enforcer Chassis

ELECTRICAL SYSTEM
Hard Wired

CHASSIS

AXLE, FRONT, CUSTOM
20,000 Lb Hendrickson Steertek Axle

AXLE, REAR
27,000 Lb Dana Axle

ENGINE
510 HP Paccar MX13 Engine

TRANSMISSION
Allison 6th Gen, 4000 EVS P

BUMPER
22" Extended Painted Steel

CAB
7010 Enforcer Cab

BODY

TOTAL TANK CAPACITY
1000 Gallon New York Style Poly Tank

WATER CAPACITY
1000 Gallons of Water

FOAM CELL CAPACITY
Foam Cell Not Required

COMPT, PUMPER, REAR
Rear Tool Compt

COMPT, PUMPER, LEFT SIDE
152" Lap Full Height Front & Rear FDLER

COMPT, PUMPER, RIGHT SIDE
152" Lap Low FDLER

FIRE SUPPRESSION

PUMPHOUSE
45" Control Zone Side Mount

PUMP
1500 GPM Waterous CX

CROSSLAYS, 1.50"
(2) 1.50" Standard Capacity

CROSSLAYS, 2.50"
2.50" Crosslay Not Required

SPEEDLAYS
Speedlays Not Required

GENERATOR
Generator Not Required

FOAM SYSTEM
Foam System Not Required

SAFETY

Side Roll and Frontal Impact Protection

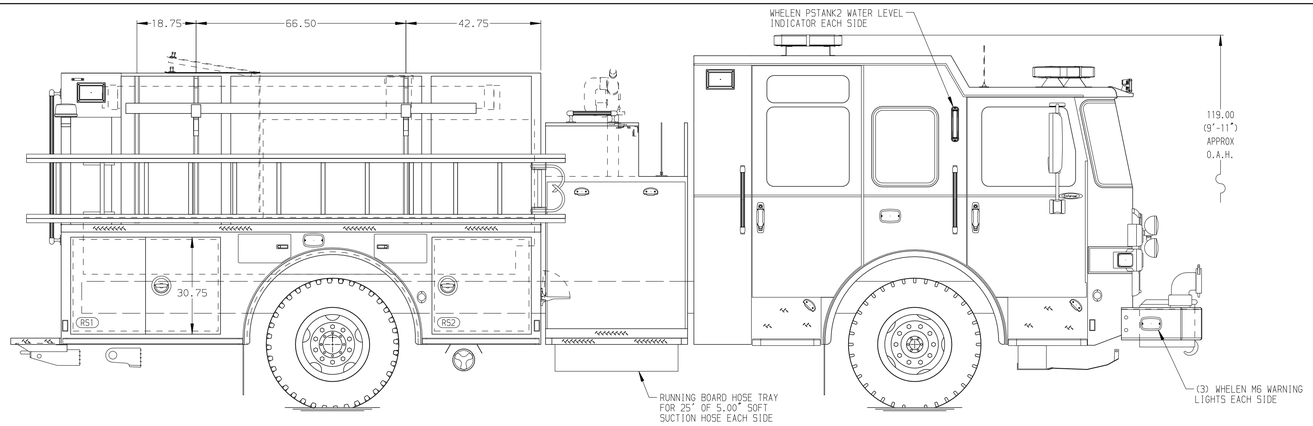

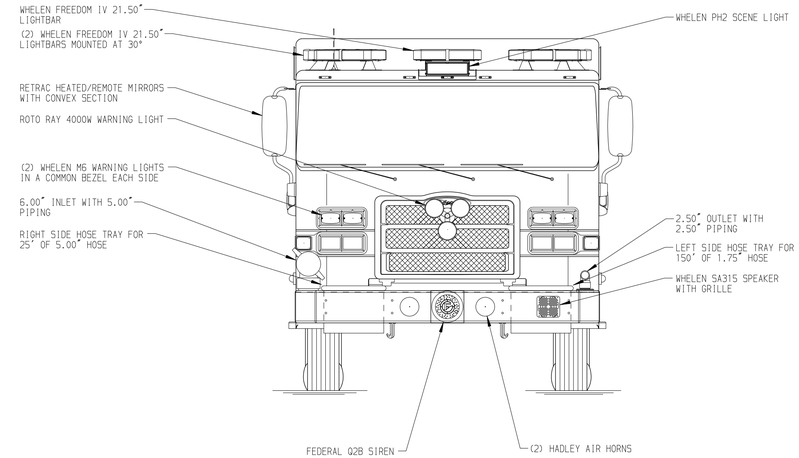

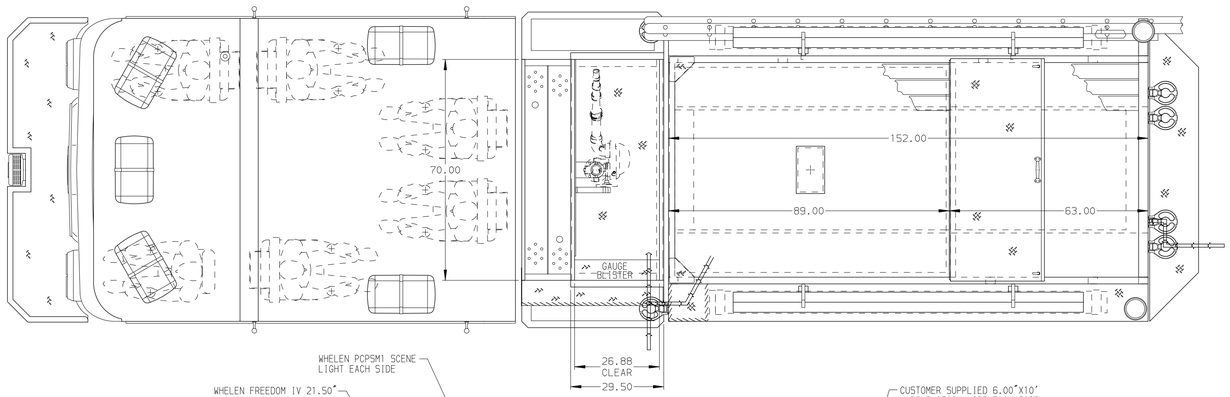

HOSEBED CAPACITIES
1. 400' OF 1.75" MERCEDES AQUAFLOW HOSE
2. 200' OF 2.50" MERCEDES AQUAFLOW HOSE
3. 1000' OF 5.00" MERCEDES MEGAFLOW HOSE
4. 200' OF 2.50" MERCEDES AQUAFLOW HOSE
5. 250' OF 1.75" MERCEDES AQUAFLOW HOSE

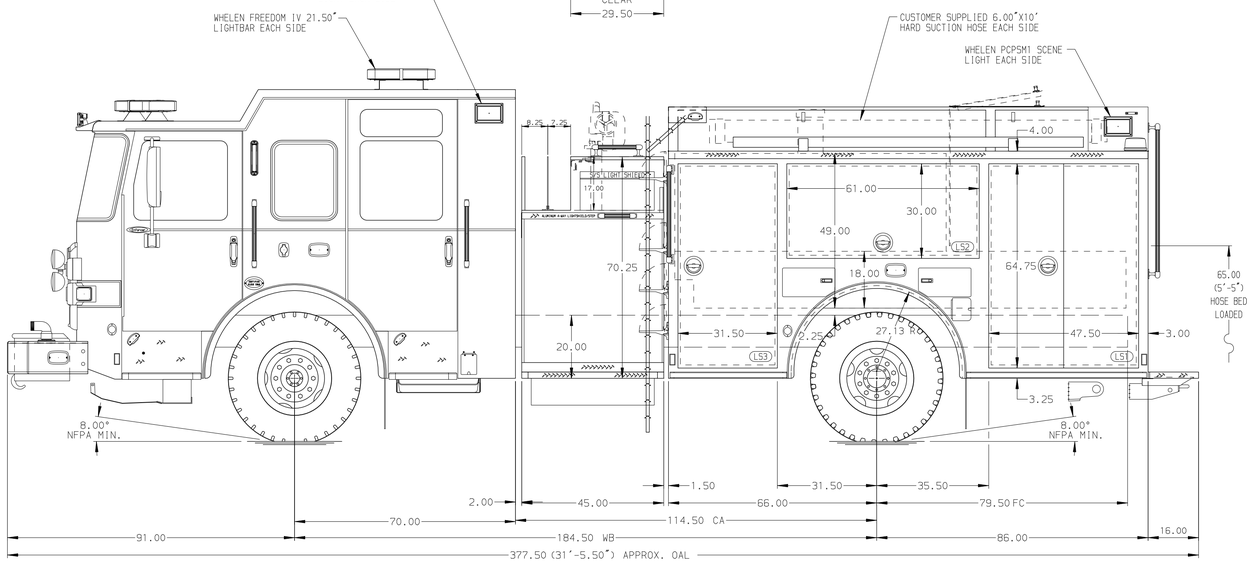

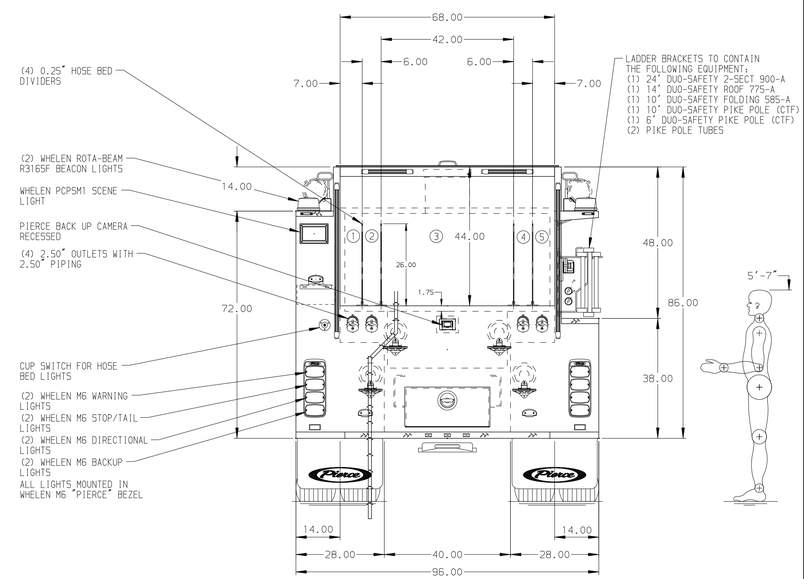

NOTE

DIMENSIONS SHOWN ARE APPROXIMATE AND ARE SUBJECT TO MINOR DEVIATIONS AS MAY OCCUR OR BE NECESSARY IN CONSTRUCTION.
MINOR DETAILS NOT SHOWN.

1. BATTERY CHARGER LOCATED PER ORDER
2. BATTERY CHARGER INDICATOR LOCATED PER ORDER
3. ONE FULL WIDTH/DEPTH ADJUSTABLE SHELVES WITH SIDES LOCATED PER ORDER
4. CUSTOMER PROVIDED WHEEL CHOCKS
5. THREE FLOOR MOUNTED SLIDE-OUT TRAY WITH SIDES LOCATED PER ORDER
6. AIR INLET WITH DISCONNECT FITTING LOCATED PER ORDER
7. KUSSMAUL 120V SHORELINE RECEPTACLE WITH AUTO EJECT LOCATED PER ORDER
8. ONE 120V DUPLEX RECEPTACLE IN REAR BODY LOCATED PER ORDER
9. ONSPOT TIRE CHAINS PROVIDED AT THE REAR

REV	DATE	BY	CH
3	310CT25	BST	ARG
2	22SEP25	BST	ARG

CHASSIS DATA
MAKE: PIERCE
MODEL: ENFORCER

Pierce MANUFACTURING INC.

TITLE: Pierce Pumper Approval Drawing
FOR: Cheswold Volunteer Fire Company
DWG NO.: 41468AD

JOB NO.	41468
SCALE	1:24
DATE	
DRAWN BY	BST 02SEP25
CHECKED BY	MMF 02SEP25
SHEET SIZE	D
SHEET NO.	1 OF 1

View File Created 04-NOV-2025 10:27:17