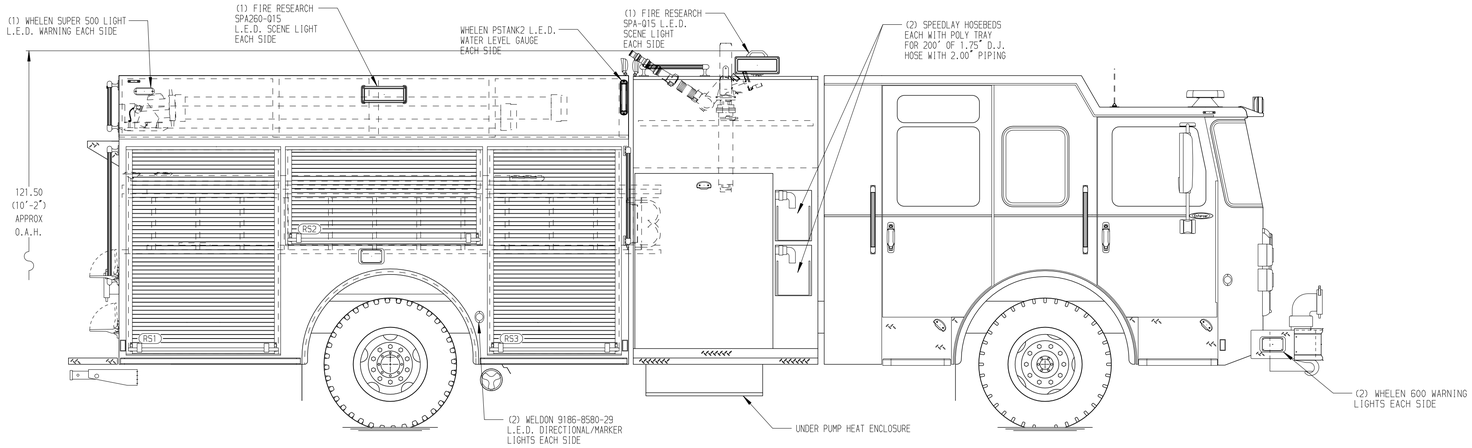

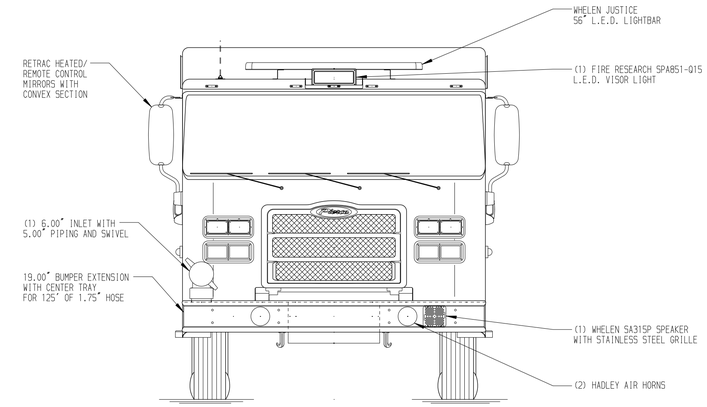

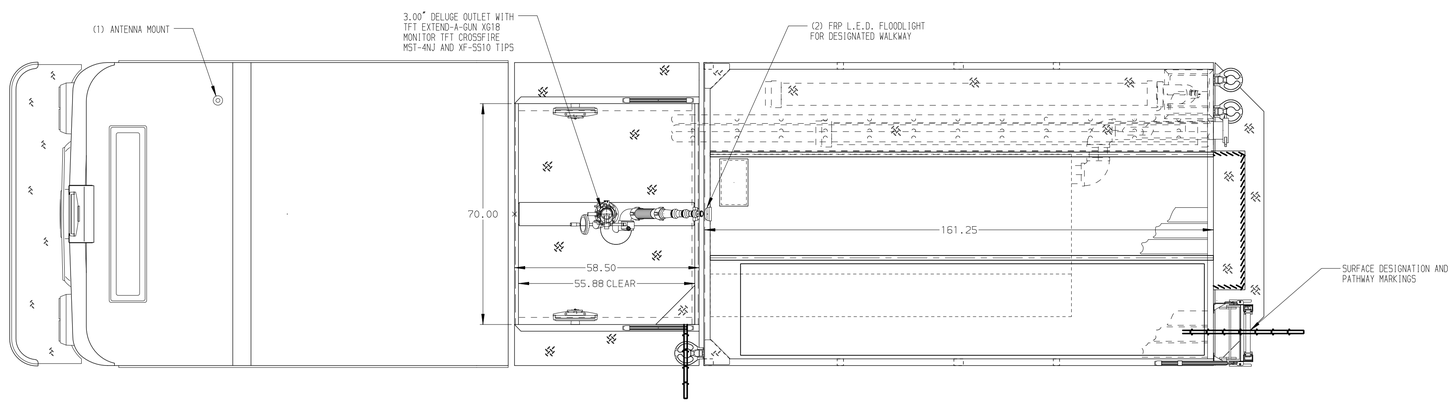

HOSEBED CAPACITIES

1. 200' OF 2.50" D.J. POLY HOSE
2. 200' OF 2.50" D.J. POLY HOSE
3. 300' OF 5.00" D.J. POLY HOSE

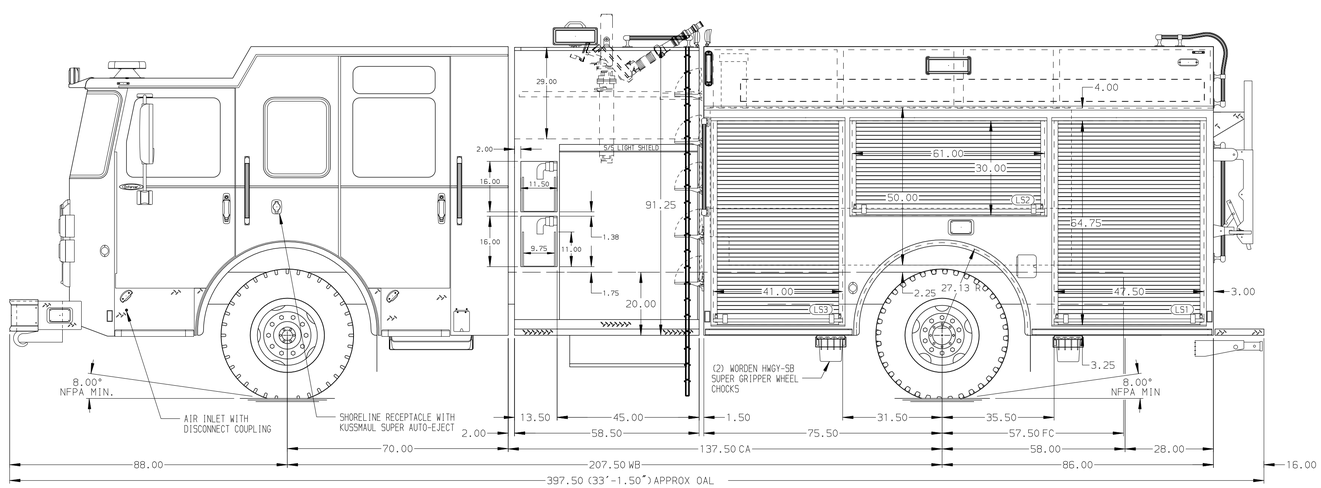

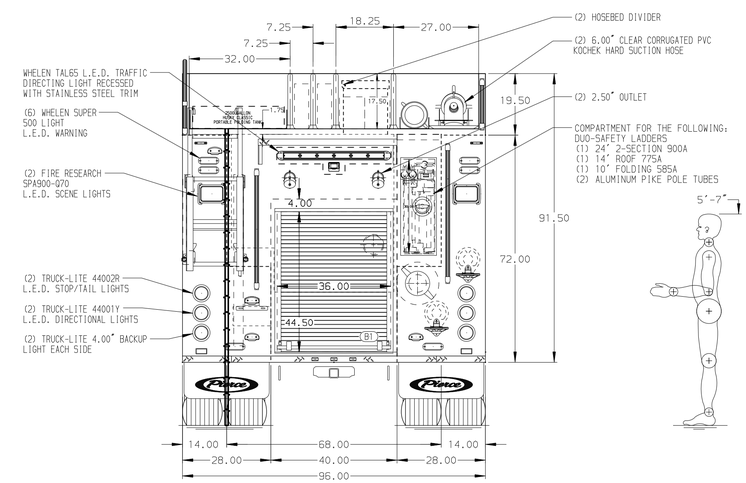

ALUMINUM BODY

SIDE ROLL AND FRONTAL IMPACT PROTECTION

NOTE

DIMENSIONS SHOWN ARE APPROXIMATE AND ARE SUBJECT TO MINOR DEVIATIONS AS MAY OCCUR OR BE NECESSARY IN CONSTRUCTION.
MINOR DETAILS NOT SHOWN.

1.CTECH DRAWER ASSEMBLY IN COMPARTMENT LS3
2.BATTERY CHARGER LOCATED BEHIND DRIVER SEAT

REV	DATE	BY	CH
V	23MAR26	JWR	ARG
V	07OCT25	BBA	ARG
V	11SEP25	JWR	ARG

CHASSIS DATA
MAKE: PIERCE
MODEL: ENFORCER

Pierce MANUFACTURING INC.

TITLE: 1250 GPM, 1000G TANK
161" PUMPER, HARD WIRED

FOR: CHIPPEWA VALLEY TECHNICAL COLLEGE
EAU CLAIRE, WISCONSIN

DWG NO.: 41474AD

JOB NO.	41474
SCALE	1:24
DATE	
DRAWN BY	JWR
	22JUN25
CHECKED BY	CDU
	25JUL25
SHEET SIZE	D
SHEET NO.	1 OF 1

View File Created 23-MAR-2026 10:04:51