RIGHT SIDE COMPARTMENTS
CONTAIN THE FOLLOWING:

COMPARTMENT RS1 CONTAINS:
- (1) HORIZONTAL FLOOR EXTENSION
- (2) STD DEPTH ADJ SHELVES
- (2) 2-WAY ADJ SLIDE OUT TRAYS
- (1) STD DEPTH FLOOR MOUNTED TRAY
- (1) 1/2 DEPTH FLOOR MTD SLIDE OUT TRAY
- (1) VERTICAL COMPARTMENT DIVIDER
- (1) RACK FOR 6 SCBA BOTTLES
- (2) 15/20A,120V DUPLEX RECEPTACLES

COMPARTMENT RS2 CONTAINS:
- (1) 1/2 DEPTH ADJ SLIDE OUT/TILT TRAY
- (1) 1/2 DEPTH SLIDEMASTER TRAY
- (1) 20A,120V 6-PLACE RECEPTACLE LOCATED IN LOWER TRAY
- (1) 15/20A,120V DUPLEX RECEPTACLE
- (1) HDMI INPUT/OUTPUT
-

COMPARTMENT RS3 CONTAINS:
- (1) 2-DRAWER C-TECH CABINET
- (1) VERTICAL COMPARTMENT DIVIDER
- (1) HORIZONTAL FLOOR EXTENSION
- (2) STD DEPTH ADJ SHELVES
- (1) 2-WAY FLOOR MTD SLIDEMASTER TRAY WITH TOOLBOARD
- (1) 15/20A,120V DUPLEX RECEPTACLE
-

COMPARTMENT RS4 CONTAINS:
- (1) STD DEPTH ADJ SHELF(LOWER)
- (1) SPECIAL DEPTH ADJ SLIDE OUT TRAY
- (1) SPECIAL DEPTH ADJ SLIDE OUT/TILT TRAY
- (6) 15/20A,120V DUPLEX RECEPTACLES
-

COMPARTMENT RS5 CONTAINS:
- (1) ADJUSTABLE SHELF
-
-

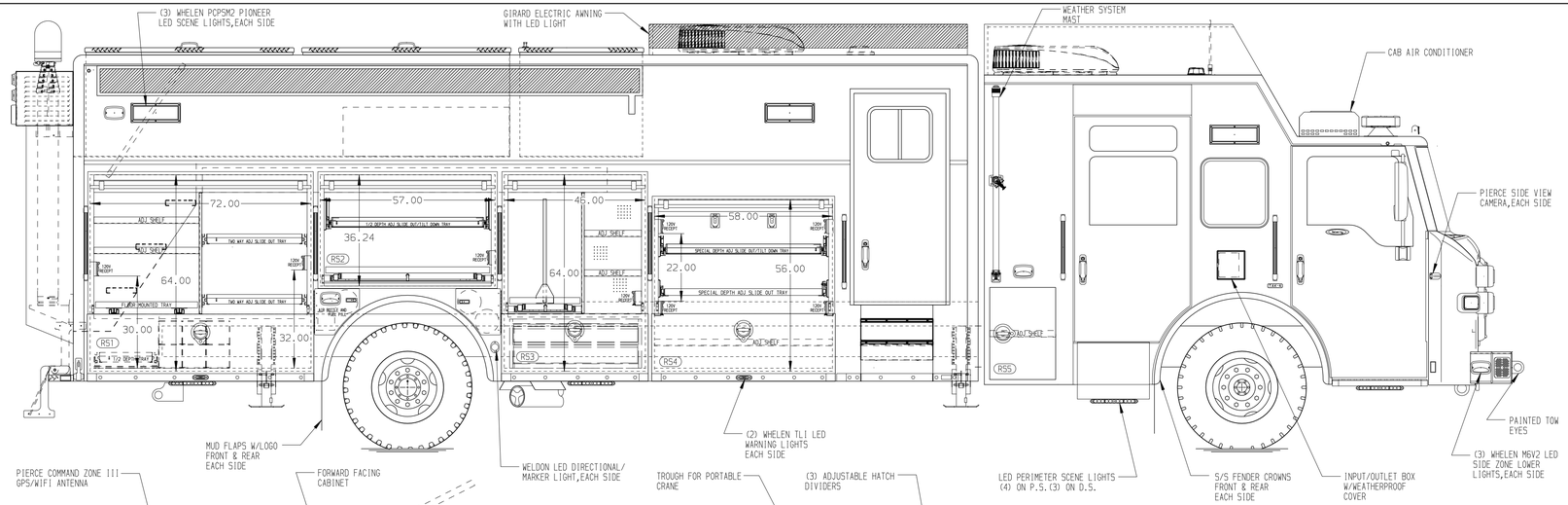

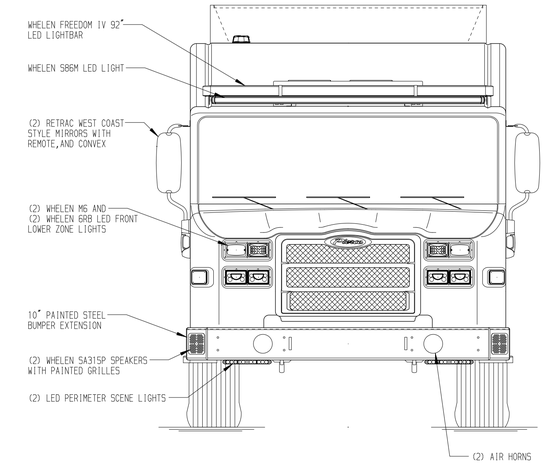

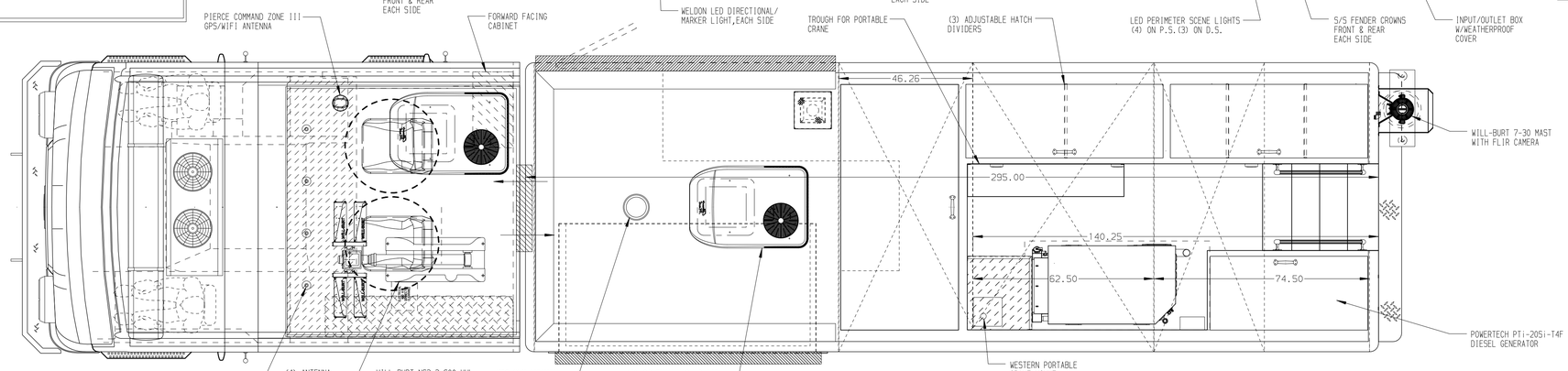

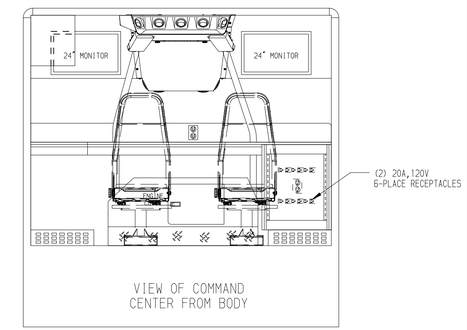

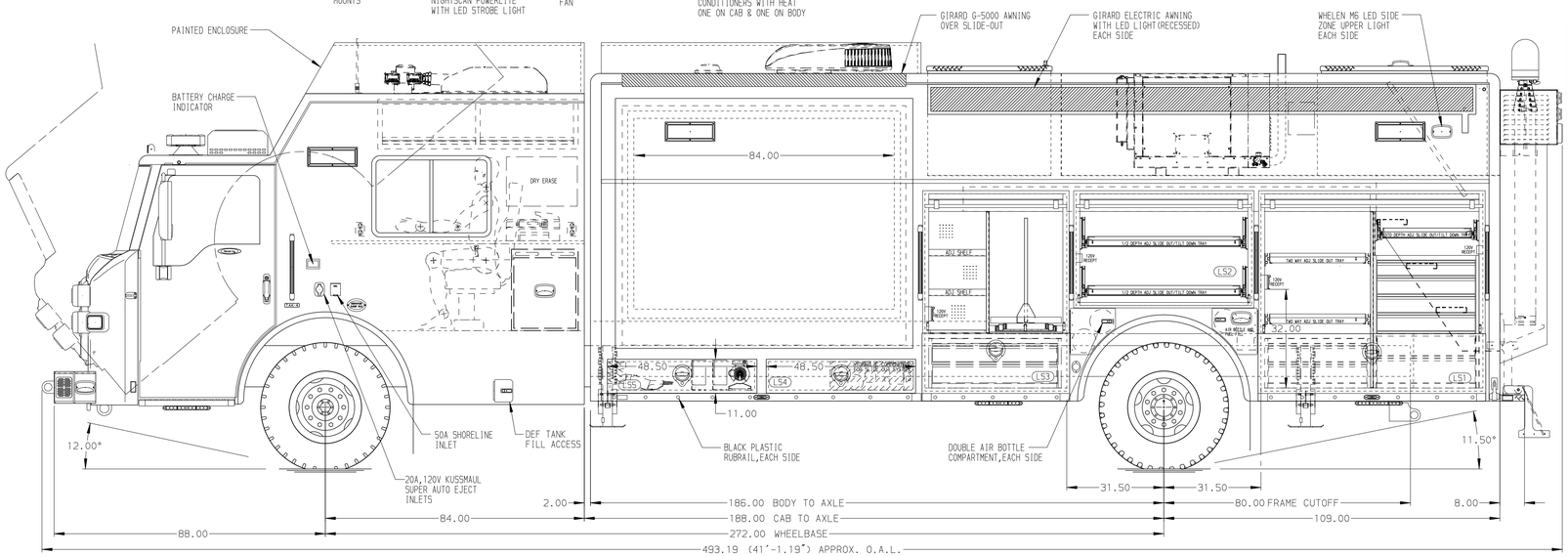

LEFT SIDE COMPARTMENTS
CONTAIN THE FOLLOWING:

COMPARTMENT LS1 CONTAINS:
- (1) HORIZONTAL FLOOR EXTENSION
- (1) STD DEPTH ADJ SLIDE OUT/TILT TRAY
- (2) 2-WAY ADJ SLIDE OUT TRAYS
- (1) 2-DRAWER C-TECH CABINET
- (1) 6-DRAWER C-TECH CABINET
- (1) VERTICAL COMPARTMENT DIVIDER
- (2) 15/20A,120V DUPLEX RECEPTACLES

COMPARTMENT LS2 CONTAINS:
- (2) 1/2 DEPTH ADJ SLIDE OUT/TILT TRAYS
- (1) 15/20A,120V DUPLEX RECEPTACLE
- (1) 20A,120V 6-PLACE RECEPTACLE LOCATED IN LOWER TRAY
- (1) HDMI INPUT/OUTPUT

COMPARTMENT LS3 CONTAINS:
- (1) 2-DRAWER C-TECH CABINET
- (1) HORIZONTAL FLOOR EXTENSION
- (2) STD DEPTH ADJ SHELVES
- (1) 2-WAY FLOOR MTD SLIDEMASTER TRAY WITH TOOLBOARD
- (1) VERTICAL COMPARTMENT DIVIDER
- PEGBOARD ON BACK WALL OF COMPARTMENT (FORWARD PORTION)
- (2) 15/20A,120V DUPLEX RECEPTACLES
-

COMPARTMENT LS4 CONTAINS:
-
-
-

COMPARTMENT LS5 CONTAINS:
- (1) KUSSMAUL CHIEF BATTERY CHARGER
- (2) PROGRESSIVE DYNAMICS CHARGERS
- (1) CAMERA MAST AIR COMPRESSOR
- (1) NIGHTSCAN CONTROLLER

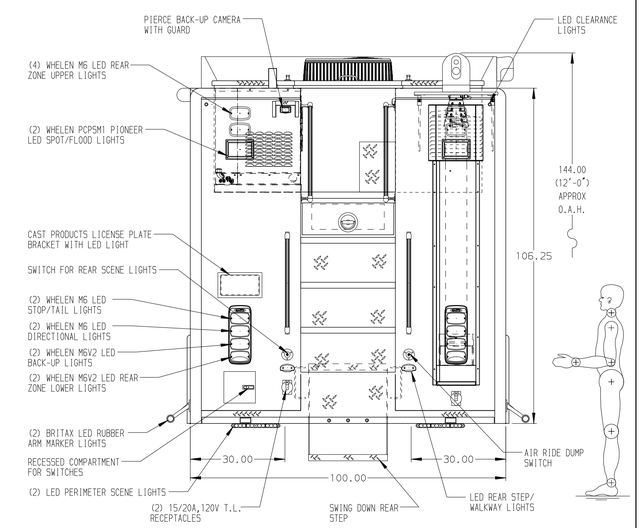

NOTE

DIMENSIONS SHOWN ARE APPROXIMATE AND ARE SUBJECT TO MINOR DEVIATIONS AS MAY OCCUR OR BE NECESSARY IN CONSTRUCTION.
MINOR DETAILS NOT SHOWN.

NOTES:
1. FLOOR IN CAB AND COMMAND CAB TO BE LONSEAL, LONPLATE II
2. BIGFOOT AUTOMATIC LEVELING SYSTEM
3. KEYED LOCKS FOR ALL BODY LAP STYLE DOORS
4. PIERCE LED LIGHTS IN ALL BODY AND HATCH COMPARTMENTS

FRONTAL IMPACT PROTECTION
MAXIMUM O.A.H.: 12'-0"

CLEAR DOOR WIDTH KEY	
AMDOR ROLL UP DOORS:	-2 1/4"
GORITTE ROLL UP DOORS:	-2 1/2"
PIERCE DOUBLE LAP DOORS:	-4 1/4"
PIERCE LIFT-UP LAP DOORS:	-1 1/2"
(EX: 60"F-F - 2 1/4"= 57 3/4" CLEAR) (F-F)= FRAME TO FRAME	

REV	DATE	BY	CH
V	22DEC25	DHE	CDK
V	200CT25	DHE	CDK
V	160CT25	DHE	CDK
V	21JUL25	DHE	GFI

CHASSIS DATA	
MAKE	PIERCE
MODEL	VXFR8420

Pierce MANUFACTURING INC.

TITLE	HEAVY DUTY RESCUE COMBO WALKIN/NON-WALKIN	JOB NO.	41480
		SCALE 1:24	DATE
FOR	SOLANO COUNTY BID #994 GOLDEN STATE FIRE APPARATUS,INC JON BAUER	DRAWN BY DHE	12MAY25
		CHECKED BY GFI	15MAY25
DWG NO.	41480AD-SH1	SHEET SIZE D	SHEET NO. 1 OF 1

View File Created 22-DEC-2025 14:56:07