PUMPER

BODY
Short Aluminum 2nd Gen Pumper

CHASSIS
Enforcer Chassis

ELECTRICAL SYSTEM
Hard Wired

CHASSIS

AXLE, FRONT, CUSTOM
21,500 Lb Meritor Axle

AXLE, REAR
24,000 Lb Meritor Axle

ENGINE
510 HP Paccar MX13 Engine

TRANSMISSION
ALlison 6th Gen, 4000 EVS P

BUMPER
22" Extended Painted Steel

CAB
7000 Enforcer Cab

BODY

TOTAL TANK CAPACITY
750 Gallon New York Style Poly Tank

WATER CAPACITY
750 Gallons of Water

FOAM CELL CAPACITY
Foam Cell Not Required

COMPT, PUMPER, REAR
30.75" FF Rollup Rear Compt

COMPT, PUMPER, LEFT SIDE
145" Rollup Full Height Front & Rear FDLER

COMPT, PUMPER, RIGHT SIDE
145" Rollup Low FDLER

FIRE SUPPRESSION

PUMPHOUSE
45" Control Zone Side Mount

PUMP
1500 GPM Waterous CSU

CROSSLAYS, 1.50"
(2) 1.50" Standard Capacity

CROSSLAYS, 2.50"
2.50" Crosslay Not Required

SPEEDLAYS
Speedlays Not Required

GENERATOR
Generator Not Required

FOAM SYSTEM
Foam System Not Required

SAFETY
Side Roll and Frontal Impact Protection

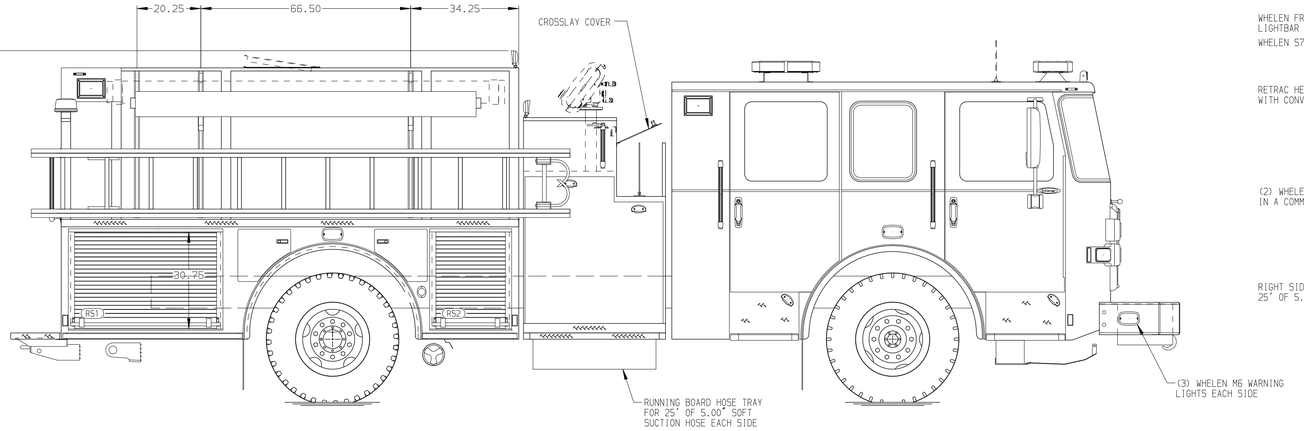

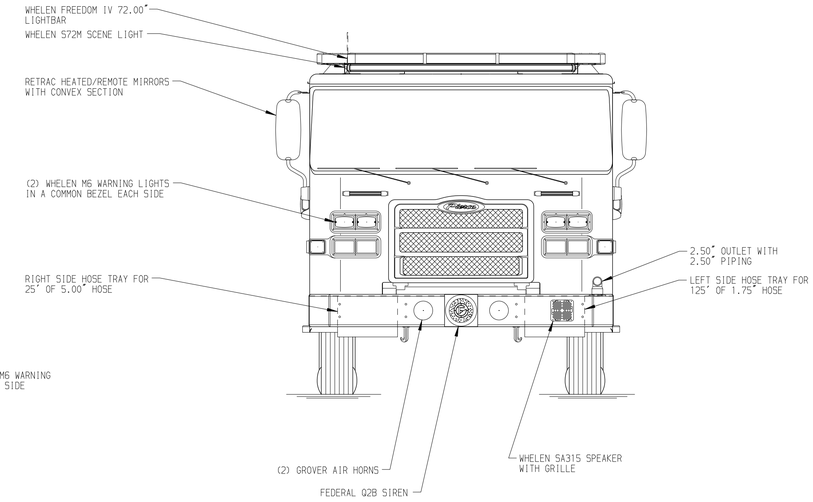

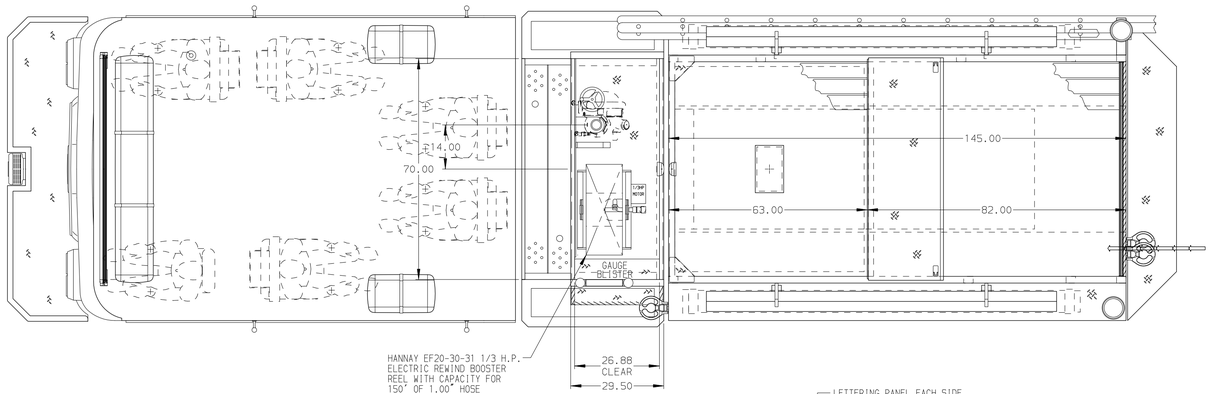

HOSEBED CAPACITIES
1. 200' OF 2.50" D.J. POLY HOSE
2. 300' OF 1.75" D.J. POLY HOSE
3. 1000' OF 5.00" D.J. POLY HOSE
4. 400' OF 3.00" D.J. POLY HOSE
5. 200' OF 2.50" D.J. POLY HOSE

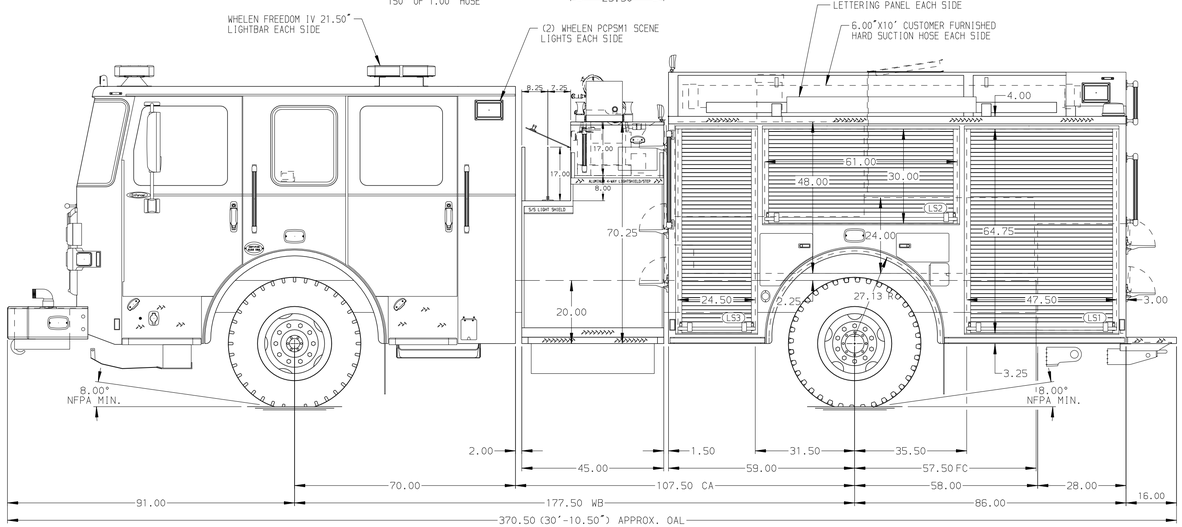

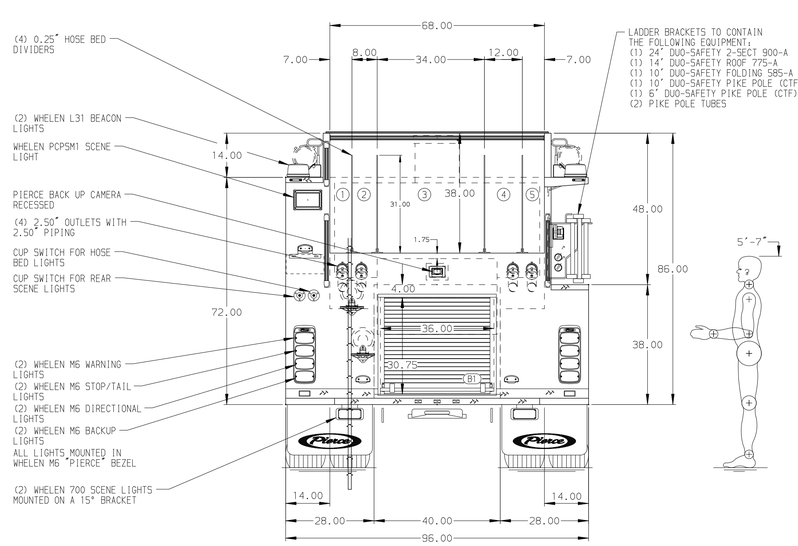

NOTE
DIMENSIONS SHOWN ARE APPROXIMATE AND ARE SUBJECT TO MINOR DEVIATIONS AS MAY OCCUR OR BE NECESSARY IN CONSTRUCTION.
MINOR DETAILS NOT SHOWN.

1. CUSTOMER PROVIDED WHEEL CHOCKS
2. BATTERY CHARGER LOCATED PER ORDER
3. BATTERY CHARGER INDICATOR LOCATED PER ORDER
4. KUSSMAUL 120V SHORELINE RECEPTACLE WITH AUTO EJECT LOCATED PER ORDER
5. FOUR FULL WIDTH/DEPTH ADJUSTABLE SHELVES WITH SIDES LOCATED PER ORDER
6. THREE FLOOR MOUNTED SLIDE-OUT TRAYS WITH SIDES LOCATED PER ORDER
7. ONE SWING-OUT TOOLBOARD WITH PEGBOARD PATTERN LOCATED PER ORDER
8. ONE 120V SIX PLACE RECEPTACLE STRIP LOCATED IN CAB PER ORDER

REV	DATE	BY	CH
7	26OCT26	KLE	ZWE
6	30MAR26	BST	ZWE
5	19FEB26	BST	ZWE
4	10NOV25	BST	ZWE

CHASSIS DATA
MAKE: PIERCE
MODEL: ENFORCER

Pierce MANUFACTURING INC.

TITLE: Pierce Pumper Approval Drawing
FOR: Grottoes Volunteer Fire Department
DWG NO.: 41532AD

JOB NO.: 41532
SCALE: 1:24
DRAWN BY: BST
DATE: 08SEP25
CHECKED BY: MMF
DATE: 10OCT25
SHEET SIZE: D
SHEET NO.: 1 OF 1

View File Created 26-OCT-2026 09:58:30