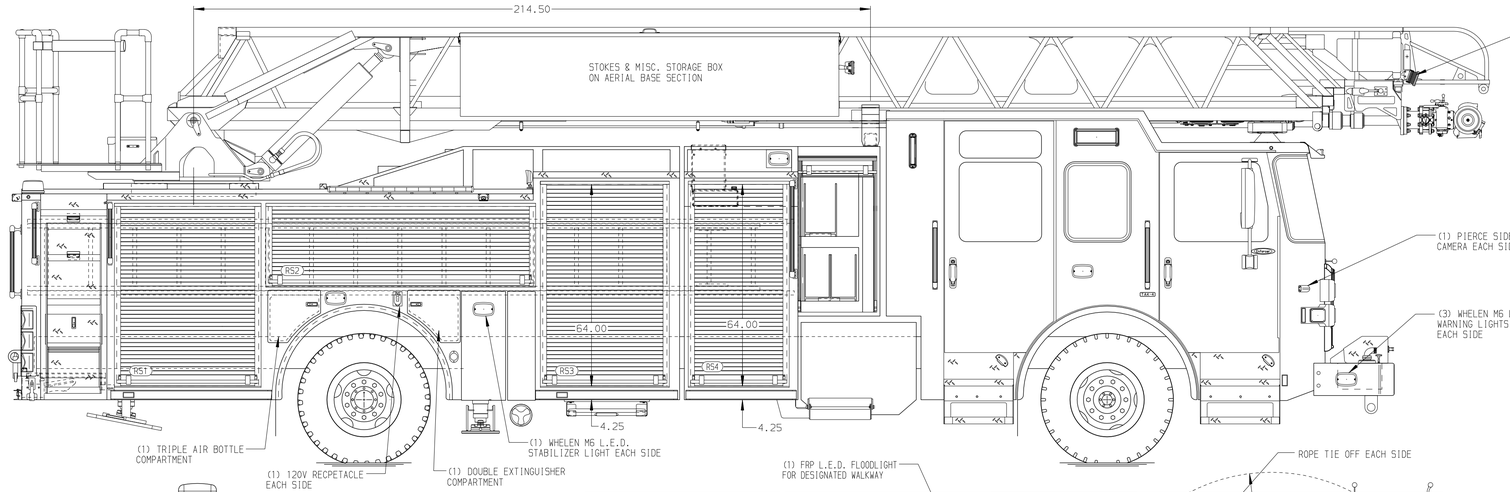

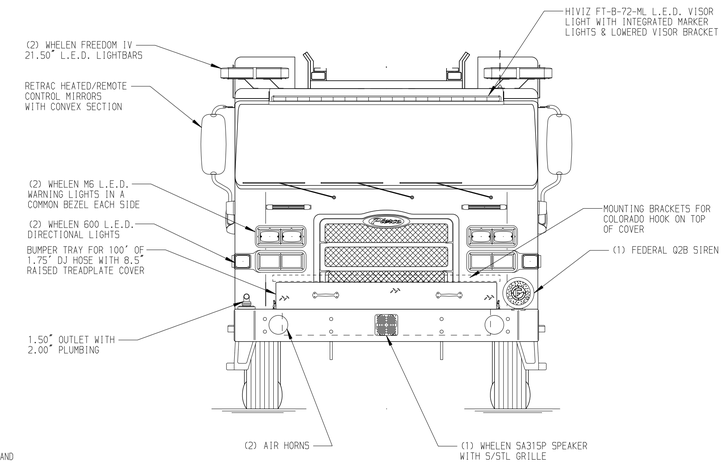

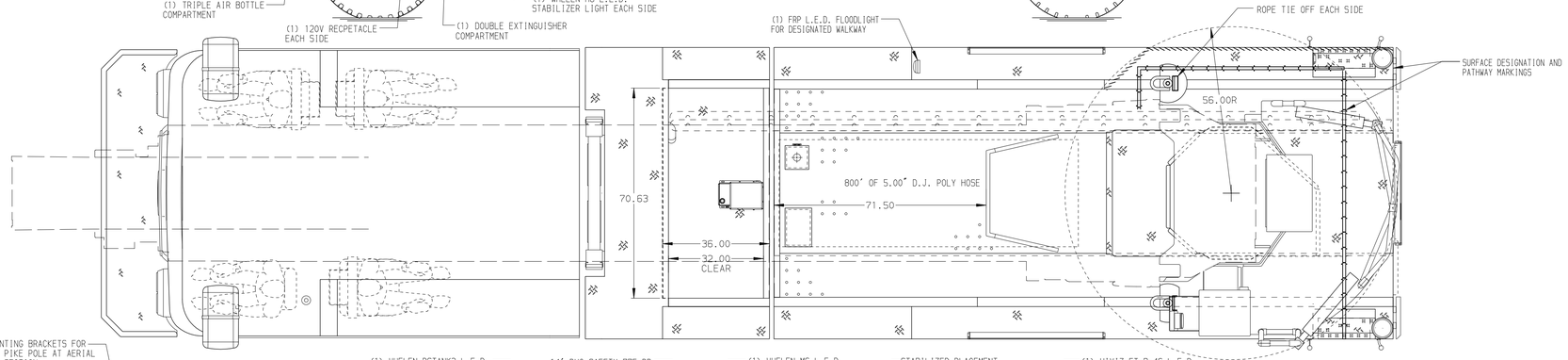

BODY	TOTAL TANK CAPACITY
107' ASL Aluminum Body PUC	500 Gallon Poly Tank
COMPT,LEFT SIDE FRONT	WATER CAPACITY
Full Height Rollup Forward	480 Gallons of Water
COMPT,LEFT SIDE REAR	FOAM CELL CAPACITY
Full Height Rollup Rearward	20 Gallon Foam Cell
COMPT,RIGHT SIDE FRONT	FOAM SYSTEM
Full Height Rollup Forward	Husky 3 Single Agent Foam System
COMPT,RIGHT SIDE REAR	
Full Height Rollup Rearward	

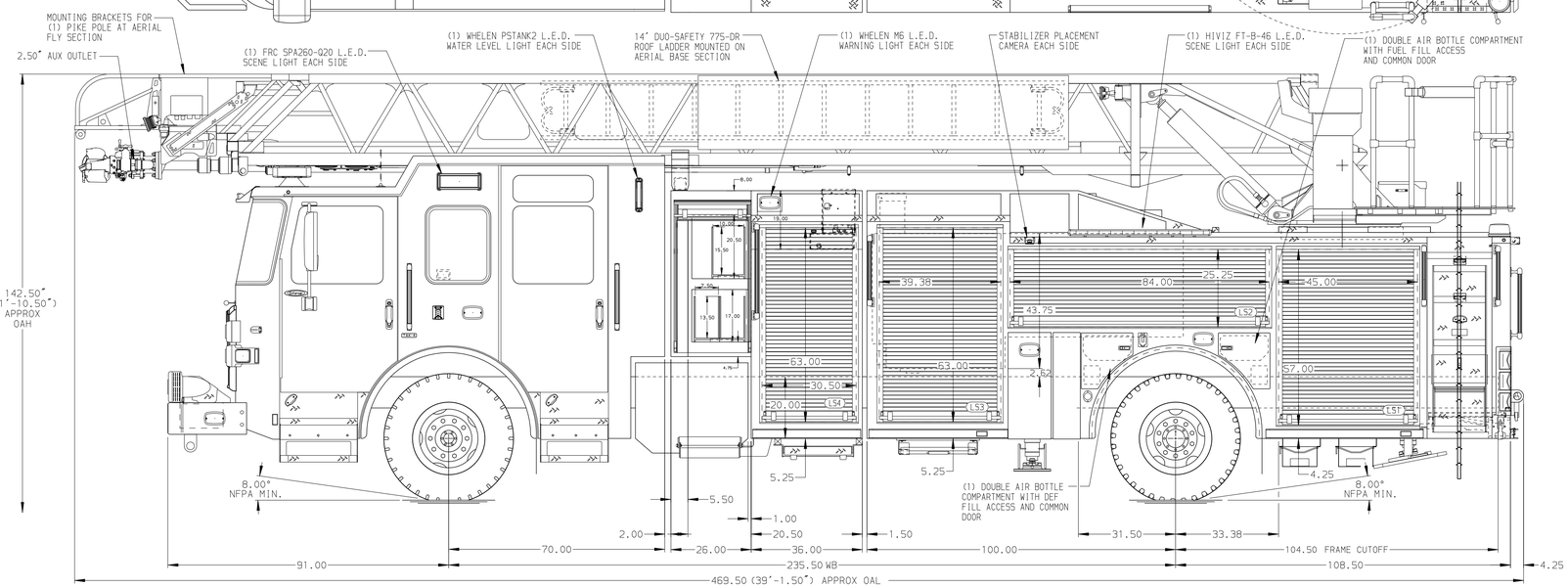

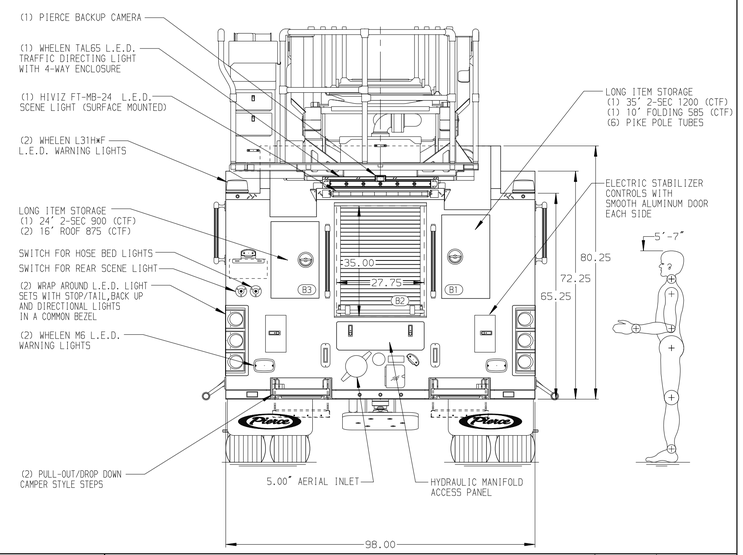

CHASSIS	CAB	ELECTRICAL SYSTEM	AXLE,FRONT,CUSTOM	PUMPHOUSE	CROSSLAYS,1.50"	GENERATOR	SAFETY
Enforcer Chassis, PUC	7010 Notched Enforcer Cab, PUC	Hard Wired	24,000 Lb TAK-4 Axle	Control Zone, PAL/PAP PUC	(2) 1.75", Poly Trays, 200'	Generator Not Required	Side Roll and Frontal Impact Protection
ENGINE	BUMPER	TRANSMISSION	AXLE,REAR	PUMP	CROSSLAYS,2.50"		
525 HP Cummins X12 Engine	22" Underslung Painted Steel	Allison 6th Gen, 4000 EVS P	33,500 Lb Meritor Axle	1750 GPM Pierce PUC-NG	(2) 2.50", Poly Trays, 200'		

NOTE

DIMENSIONS SHOWN ARE APPROXIMATE AND ARE SUBJECT TO MINOR DEVIATIONS AS MAY OCCUR OR BE NECESSARY IN CONSTRUCTION.
MINOR DETAILS NOT SHOWN.

1. NO LIMITED RETRACTION REQUIRED
2. 1500 GPM HIGH FLOW WATERWAY
3. SHORELINE RECEPTACLE WITH BLUE SEA SURE EJECT LOCATED ON DRIVER SIDE OF THE CAB
4. AIR INLET WITH DISCONNECT COUPLING LOCATED PER ORDER
5. BATTERY CHARGER LOCATED PER ORDER
6. BATTERY CHARGE INDICATOR DISPLAYED THROUGH WINDOW BEHIND DRIVER SEAT
7. SEVEN ADJUSTABLE SHELVES LOCATED IN COMPARTMENTS PER ORDER
8. ONE VERTICAL PARTITION LOCATED IN COMPARTMENT PER ORDER
9. TWO MOUNTING PLATES LOCATED IN COMPARTMENTS PER ORDER
10. ONE ACCESSORY HANGER LOCATED IN COMPARTMENT PER ORDER
11. FOUR RECEPTACLES LOCATED PER ORDER
12. TECNIQ 4-SECTION RUNG LIGHTING AT AERIAL DEVICE
13. LIFTING EYE ROPE RESCUE ATTACHMENT AT AERIAL TIP

REV	DATE	BY	CH
7	28JAN26	ANZ	GKH
6	18NOV25	ANZ	GKH

CHASSIS DATA
MAKE: PIERCE
MODEL: ENFORCER

Pierce MANUFACTURING INC.

TITLE: 107' ASCENDANT AERIAL LADDER AND BODY ASSEMBLY
FOR: HUDSON FIRE PROTECTION DISTRICT, HUDSON, CO
DWG NO.: 41562AD

JOB NO.	41562
SCALE	1:24
DATE	
DRAWN BY	ANZ
DATE	22AUG25
CHECKED BY	JLO
DATE	19SEP25
SHEET SIZE	D
SHEET NO.	1 OF 1

View File Created 29-JAN-2026 09:46:15