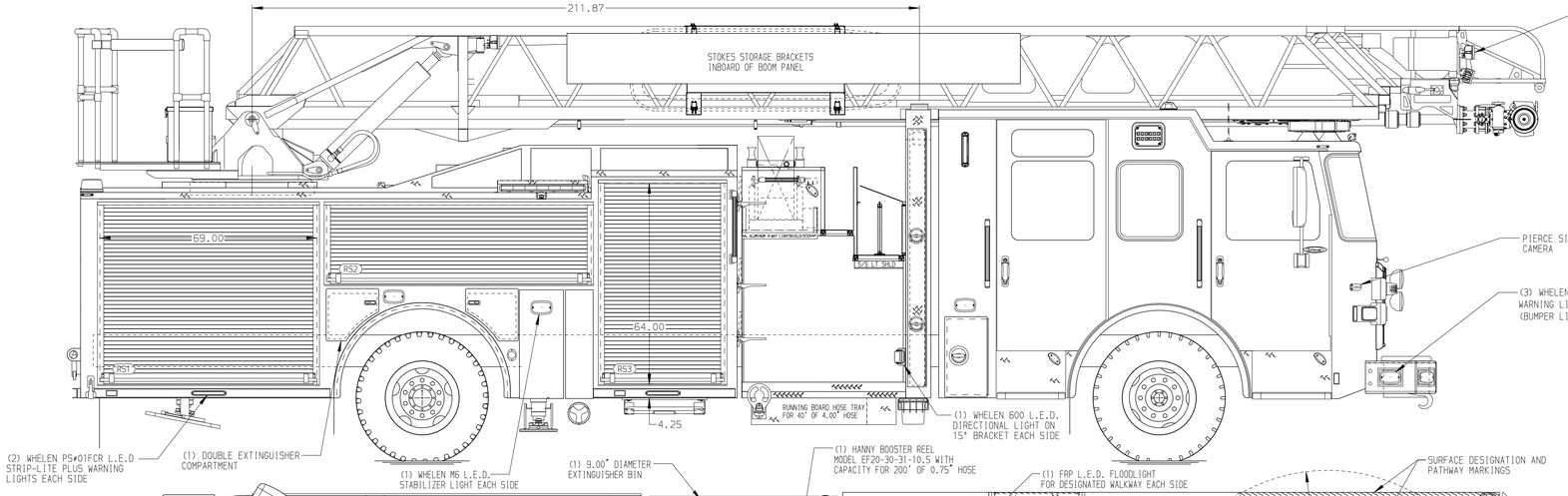

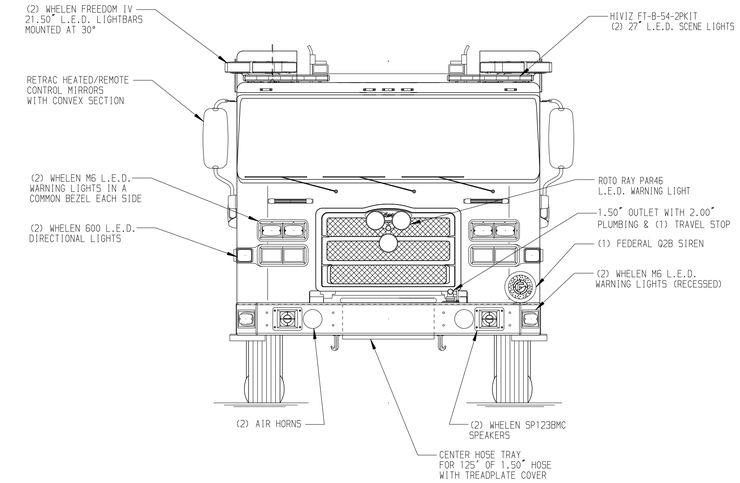

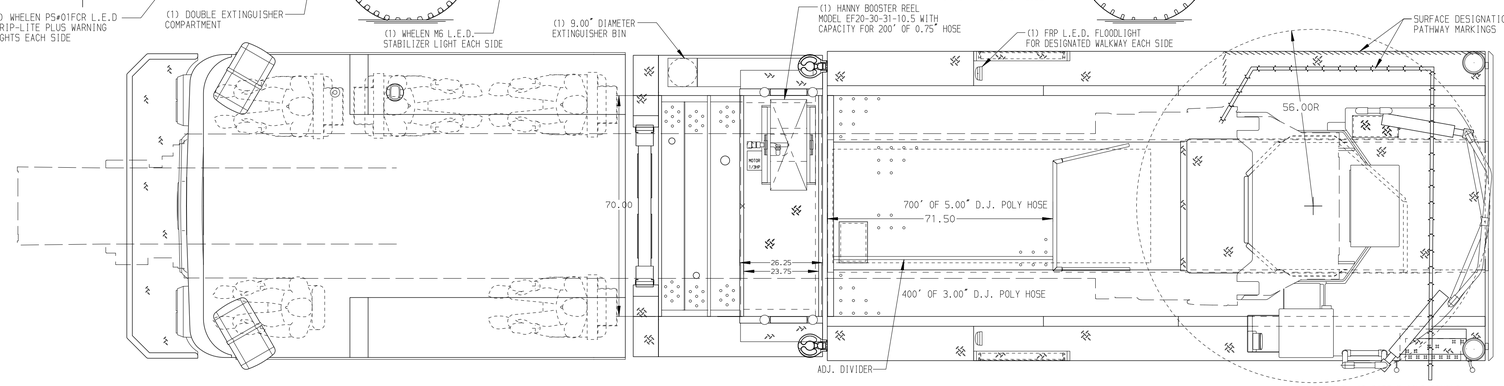

BODY	TOTAL TANK CAPACITY
107' ASL Aluminum Body	500 Gallon Poly Tank
COMPT,LEFT SIDE FRONT	WATER CAPACITY
Full Height Rollup Forward	500 Gallons of Water
COMPT,LEFT SIDE REAR	FOAM CELL CAPACITY
Full Height Rollup Rearward	Foam Cell Not Required
COMPT,RIGHT SIDE FRONT	FOAM SYSTEM
Full Height Rollup Forward	Foam System Not Required
COMPT,RIGHT SIDE REAR	
Full Height Rollup Rearward	

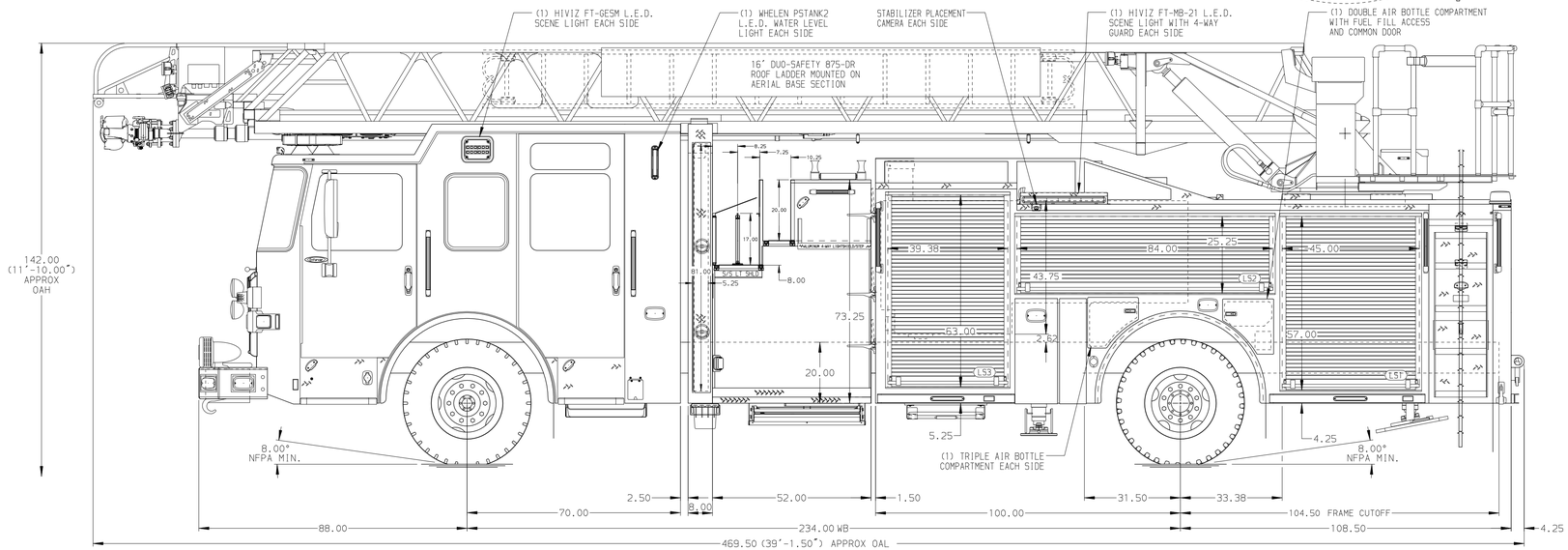

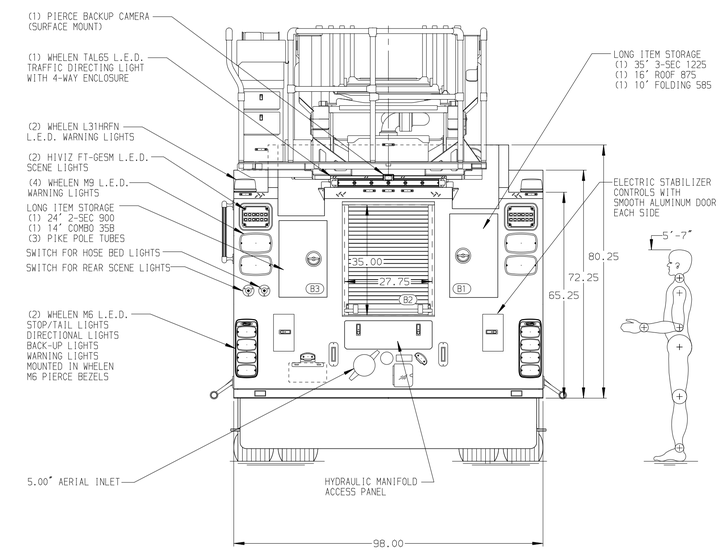

CHASSIS	CAB	ELECTRICAL SYSTEM	AXLE,FRONT,CUSTOM	PUMPHOUSE	CROSSLAYS,1.50"	SPEEDLAYS	SAFETY
Enforcer Chassis	7010 Notched Enforcer Cab	MUX	23,000 Lb Dana Axle	52" Control Zone Side Mount	(2) 1.50" Stnd Cap-With Rollers	Speedlays Not Required	Side Roll and Frontal Impact Protection
ENGINE	BUMPER	TRANSMISSION	AXLE,REAR	PUMP	CROSSLAYS,2.50"	GENERATOR	
510 HP Paccar MX13 Engine	19" Extended Painted Steel	Allison 6th Gen, 4000 EVS P	33,500 Lb Meritor Axle	1750 GPM Waterous CSU1	(1) 2.50" Stnd Cap-With Rollers	Generator Not Required	

NOTE

DIMENSIONS SHOWN ARE APPROXIMATE AND ARE SUBJECT TO MINOR DEVIATIONS AS MAY OCCUR OR BE NECESSARY IN CONSTRUCTION.
MINOR DETAILS NOT SHOWN.

1. NO LIMITED RETRACTION REQUIRED
2. REMOTE TIP CONTROLS
3. SHORELINE RECEPTACLE WITH KUSSMAUL SUPER AUTO-EJECT LOCATED ON DRIVER SIDE STEPWELL
4. AIR INLET WITH DISCONNECT COUPLING IN THE DRIVER SIDE STEPWELL
5. BATTERY CHARGER LOCATED ON DRIVER SEAT RISER
6. 1500 GPM HIGH FLOW WATERWAY
7. DC POWER TO AERIAL TIP
8. LIFTING EYE ROPE RESCUE ATTACHMENT AT AERIAL TIP
9. STAINLESS STEEL SCUFFPLATES ON REA CAB CORNERS

REV	DATE	BY	CH	
3	21JAN25	ANZ	CLM	CHASSIS DATA
2	16DEC25	ANZ	CLM	MAKE: PIERCE
1	10NOV25	ANZ	CLM	MODEL: ENFORCER

Pierce MANUFACTURING INC.

TITLE: 107' ASCENDANT AERIAL LADDER AND BODY ASSEMBLY
-

FOR: FAYETTEVILLE FIRE DEPARTMENT
FAYETTEVILLE, NC

DWG NO. 41587AD-SH1

JOB NO.	41587
SCALE 1:24	DATE
DRAWN BY ANZ	05JUN25
CHECKED BY CLM	21AUG25
SHEET SIZE D	SHEET NO. 1 OF 2

View File Created 21-JAN-2026 10:01:34