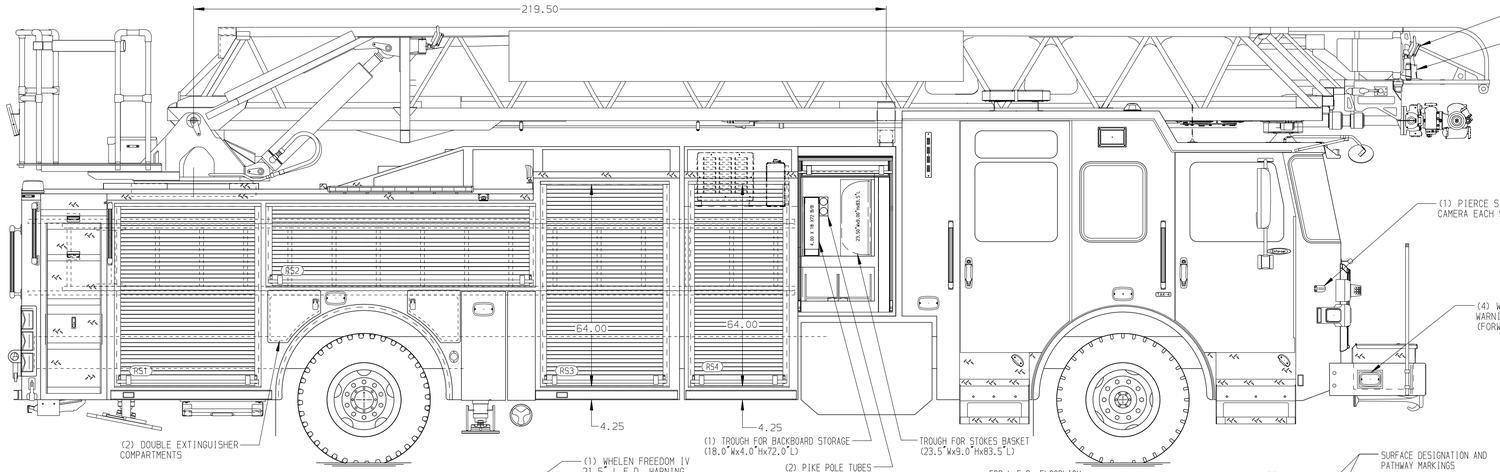

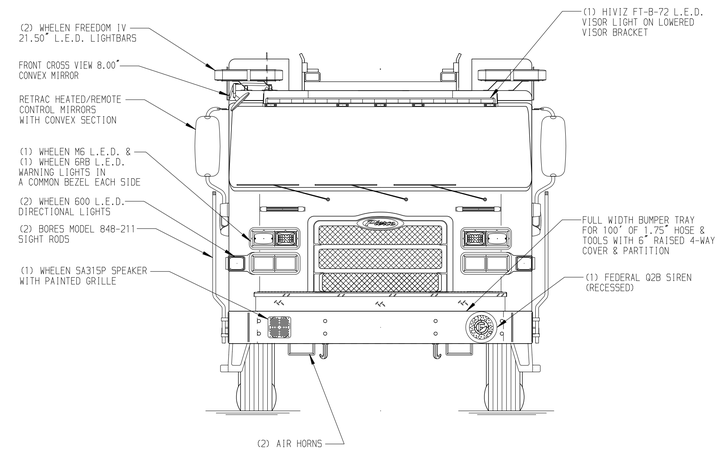

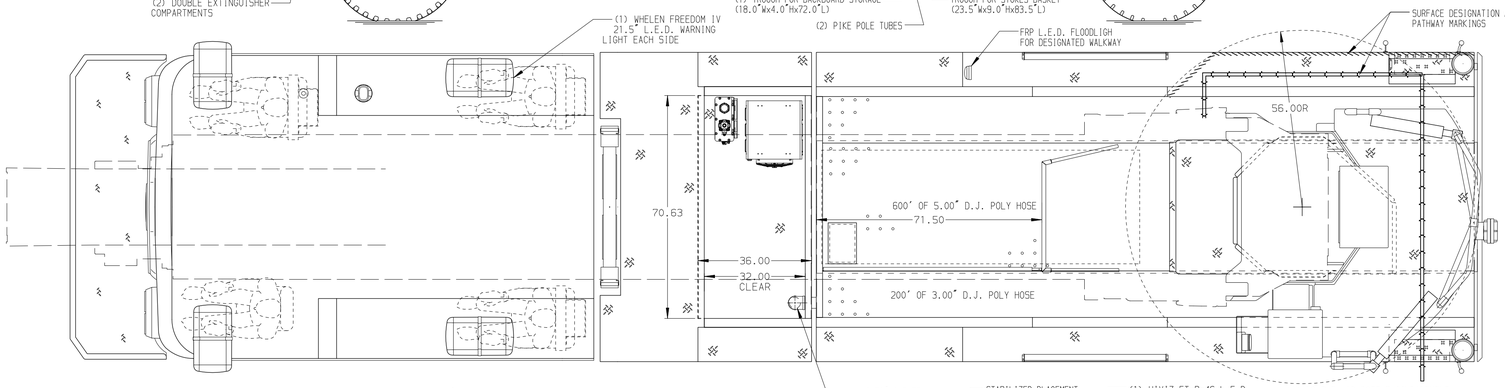

BODY	TOTAL TANK CAPACITY
107' ASL Aluminum Body PUC	500 Gallon Poly Tank
COMPT,LEFT SIDE FRONT	WATER CAPACITY
Full Height Rollup Forward	500 Gallons of Water
COMPT,LEFT SIDE REAR	FOAM CELL CAPACITY
Full Height Rollup Rearward	Foam Cell Not Required
COMPT,RIGHT SIDE FRONT	FOAM SYSTEM
Full Height Rollup Forward	Foam System Not Required
COMPT,RIGHT SIDE REAR	
Full Height Rollup Rearward	

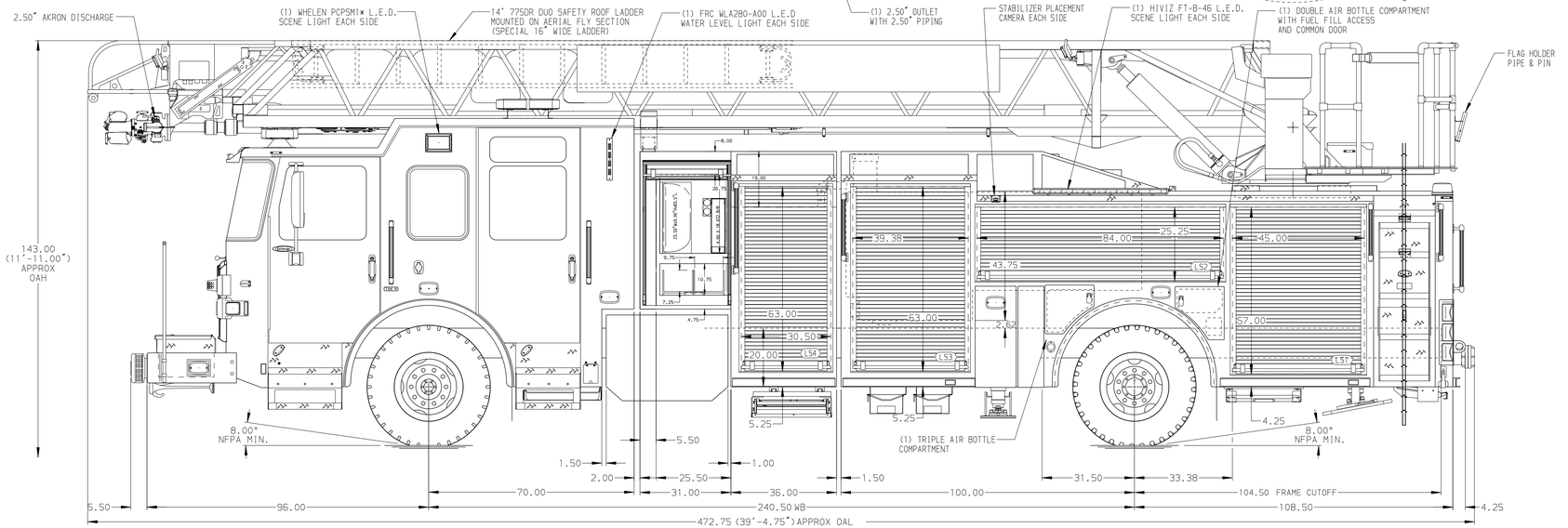

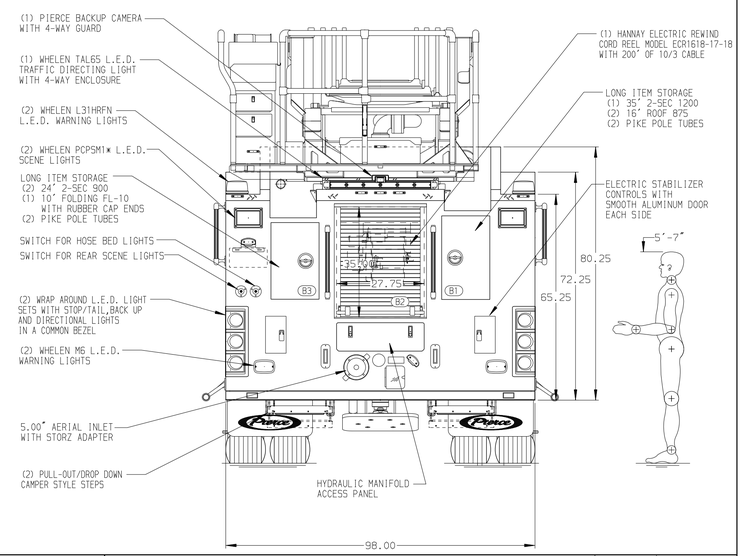

CHASSIS	CAB	ELECTRICAL SYSTEM	AXLE,FRONT,CUSTOM	PUMPHOUSE	CROSSLAYS,1.50"	GENERATOR
Enforcer Chassis, PUC	7010 Notched Enforcer Cab, PUC	MUX	24,000 Lb TAK-4 Axle	Control Zone, PAL/PAP PUC	(2) 2.00", Poly Trays, 200'	3.0 MSV Stinger Hydraulic
ENGINE	BUMPER	TRANSMISSION	AXLE,REAR	PUMP		
510 HP Paccar MX13 Engine	27" Underslung Painted Steel	Allison 6th Gen, 4000 EVS P	33,500 Lb Meritor Axle	1500 GPM Pierce PUC		

NOTE

DIMENSIONS SHOWN ARE APPROXIMATE AND ARE SUBJECT TO MINOR DEVIATIONS AS MAY OCCUR OR BE NECESSARY IN CONSTRUCTION.
MINOR DETAILS NOT SHOWN.

1. NO LIMITED RETRACTION REQUIRED
2. ONE 1.50 OUTLET WITH 2.00 PIPING AND SWIVEL LOCATED ON D5 REAR FLOOR OF BUMPER TRAY
3. SHORELINE RECEPTACLE WITH KUSSMAUL SUPER AUTO-EJECT LOCATED ON DRIVER SIDE OF CAB
4. AIR INLET WITH DISCONNECT COUPLING IN THE DRIVER SIDE STEPWELL
5. BATTERY CHARGER LOCATED PER ORDER
6. BATTERY CHARGE INDICATOR LOCATED ON DRIVER SEAT RISER
7. TEN ADJUSTABLE SHELVES LOCATED IN COMPARTMENTS PER ORDER
8. TWO SLIDE-OUT TOOLBOARDS LOCATED IN COMPARTMENTS PER ORDER
9. ONE CIRCUIT BREAKER PANEL LOCATED IN COMPARTMENT PER ORDER
10. ONE VERTICAL PARTITION LOCATED IN COMPARTMENT PER ORDER
11. TWO POLY MOUNTING BOARDS LOCATED IN COMPARTMENTS PER ORDER
12. FOUR RECEPTACLES LOCATED PER ORDER
13. ONE INVERTED FIXED SHELF LOCATED IN B2 COMPARTMENT
14. DC POWER TO AERIAL TIP
15. TECNIQ 4-SECTION RUNG LIGHTING AT AERIAL DEVICE
16. 1500 GPM HIGH FLOW WATERWAY
17. LIFTING EYE ROPE RESCUE ATTACHMENT AT AERIAL TIP

REV	DATE	BY	CH
7	18MAY26	ANZ	ZWE
6	04FEB26	ANZ	ZWE
5	22DEC25	ANZ	ZWE
4	23OCT25	ANZ	ZWE
3	04SEP25	ANZ	ZWE

CHASSIS DATA
MAKE: PIERCE
MODEL: ENFORCER

Pierce MANUFACTURING INC.

TITLE: 107' ASCENDANT AERIAL LADDER AND BODY ASSEMBLY
FOR: CLERMONT FIRE DEPARTMENT, CLERMONT, FL
DWG NO.: 41618AD

JOB NO.	41618
SCALE	1:24
DATE	
DRAWN BY	ANZ
	17JUN25
CHECKED BY	NAK
	24JUN25
SHEET SIZE	D
SHEET NO.	1 OF 1

View File Created 18-MAY-2026 11:30:02