PASSENGER'S SIDE COMPARTMENTS CONTAIN THE FOLLOWING:

COMPARTMENT P1 CONTAINS:
- (1) FLOOR MOUNTED TRAY
- (1) STD DEPTH ADJ SHELF
-

COMPARTMENT P2 CONTAINS:
- (1) STD DEPTH ADJ SLIDE OUT/TILT TRAY
-
-
-
-

COMPARTMENT P3 CONTAINS:
- (1) 1/2 DEPTH ADJ SHELF
- (1) FLOOR MOUNTED TRAY
- (1) 1/2 DEPTH ADJ SLIDE OUT TRAY
- (4) POLY TOOL BOXES
- (1) 20A,120V 6-PLACE RECEPTACLE STRIP
-
-

COMPARTMENT P4 CONTAINS:
- (1) 1/2 DEPTH ADJ SLIDE OUT/TILT TRAY
- (1) FLOOR MOUNTED TRAY
- (1) CAB LIFT CONTROLLER
- (2) 2-WAY ADJ SLIDE OUT TRAYS
-
-
-

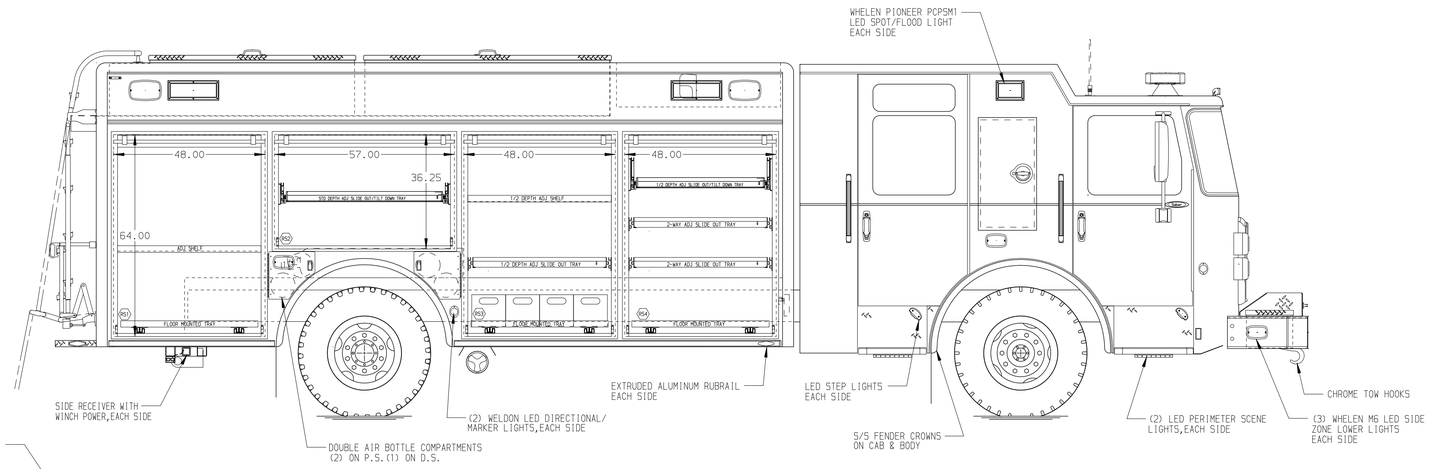

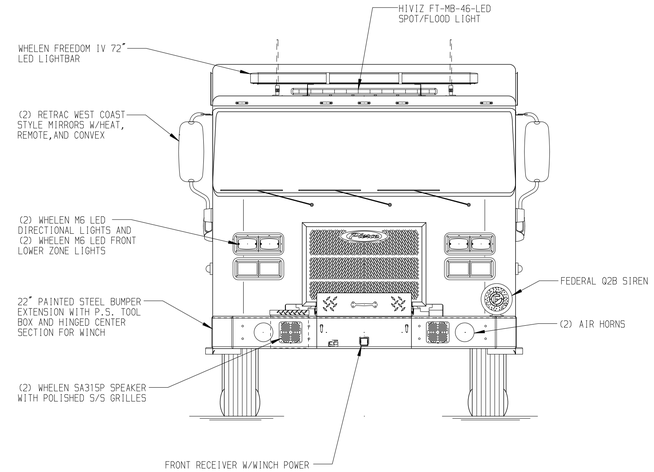

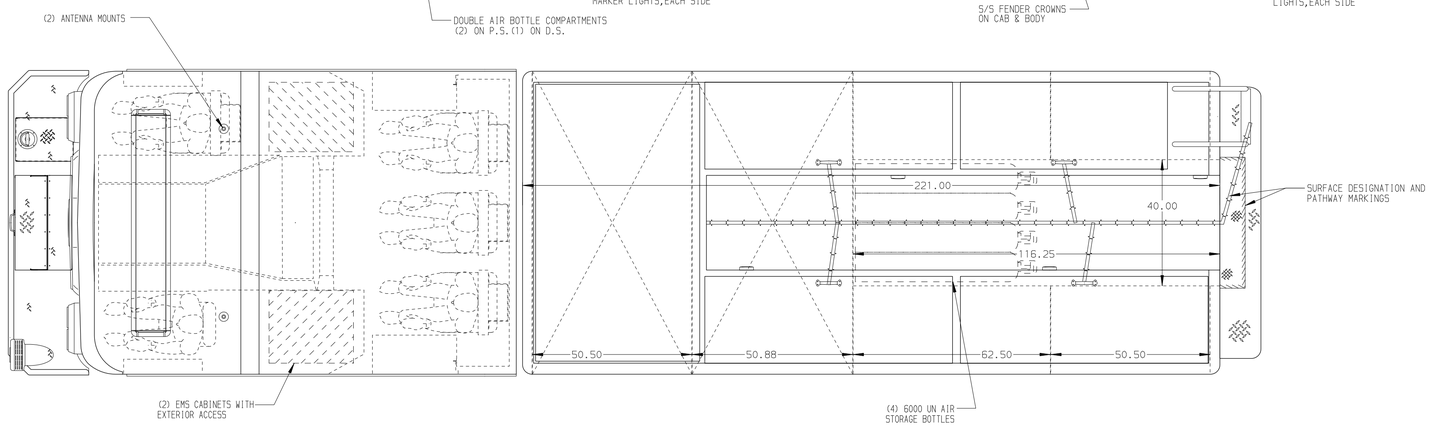

REAR COMPARTMENT CONTAINS THE FOLLOWING:

COMPARTMENT R1 CONTAINS:
- (1) 110"DP SLIDE OUT TRAY
- (1) FLOOR MOUNTED TRAY
- (1) STOKES BASKET RACK
-

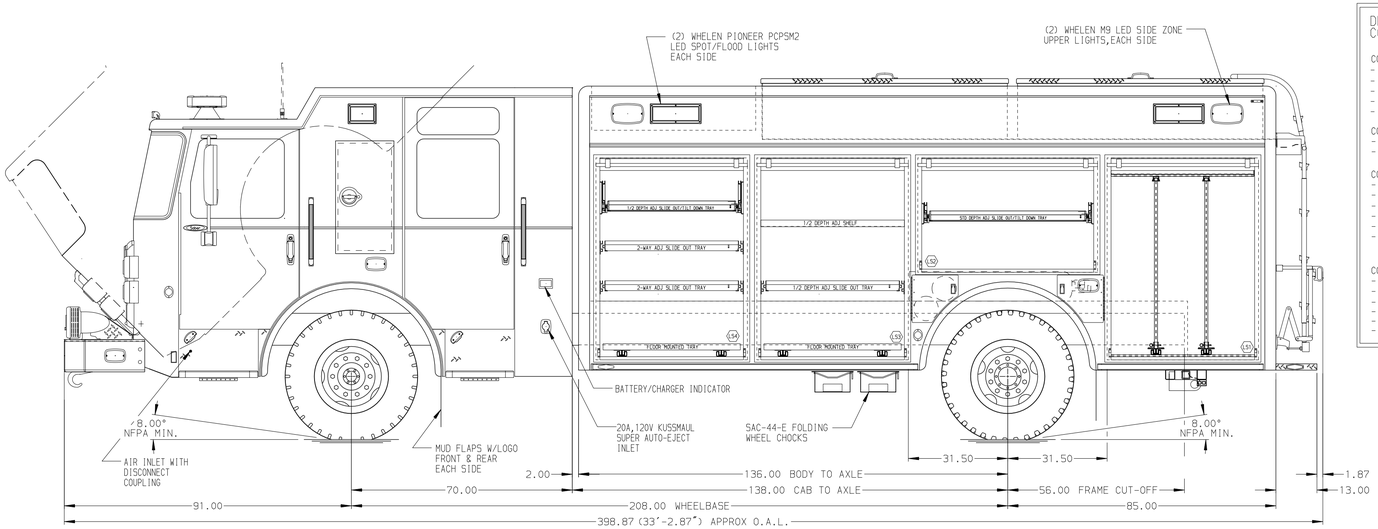

DRIVER'S SIDE COMPARTMENTS CONTAIN THE FOLLOWING:

COMPARTMENT D1 CONTAINS:
- (2) STD DEPTH ADJ SLIDE OUT TOOLBOARDS
-
-
-
-

COMPARTMENT D2 CONTAINS:
- (1) STD DEPTH ADJ SLIDE OUT/TILT TRAY
-

COMPARTMENT D3 CONTAINS:
- (1) 1/2 DEPTH ADJ SHELF
- (1) 1/2 DEPTH ADJ SLIDE OUT TRAY
- (1) FLOOR MOUNTED TRAY
- (1) 20A,120V 6-PLACE RECEPTACLE STRIP
-
-

COMPARTMENT D4 CONTAINS:
- (1) 1/2 DEPTH ADJ SLIDE OUT/TILT TRAY
- (2) 2-WAY ADJ SLIDE OUT TRAYS
- (1) FLOOR MOUNTED TRAY
-
-
-

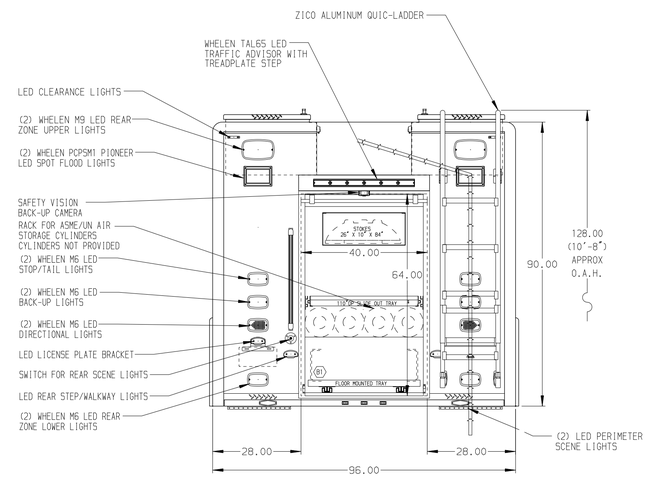

NOTE

DIMENSIONS SHOWN ARE APPROXIMATE AND ARE SUBJECT TO MINOR DEVIATIONS AS MAY OCCUR OR BE NECESSARY IN CONSTRUCTION.
MINOR DETAILS NOT SHOWN.

NOTES:
1. WARN #9,000 PORTABLE WINCH
2. FLOOR IN CAB AND CREW CAB TO BE PADDED RUBBER
3. PULL STRAPS ON ALL BODY ROLL UP DOORS
4. PIERCE LED LIGHT STRIPS IN ALL BODY AND HATCH COMPARTMENTS
5. KUSSMAUL BATTERY CHARGER LOCATED BEHIND THE DRIVER'S SEAT
6. S/S GUARDS ON ALL BODY ROLL-UP DOORS

CLEAR DOOR WIDTH KEY

AMDOR ROLL UP DOORS:	-2 1/4"
GORTITE ROLL UP DOORS:	-2 1/2"
PIERCE DOUBLE LAP DOORS:	-4 1/4"
PIERCE LIFT-UP LAP DOORS:	-1 1/2"
(EX: 60"F-F - 2 1/4"= 57 3/4" CLEAR) (F-F)= FRAME TO FRAME	

REV	DATE	BY	CH
1	14JUN24	VHO	CGA
2	19MAR24	DHE	CAG

CHASSIS DATA
MAKE: PIERCE
MODEL: SBFR7010

Pierce MANUFACTURING INC.

TITLE: HEAVY DUTY RESCUE NON-WALKIN
FOR: COLUMBIA COUNTY FD MARTINEZ, GA
DWG NO.: 41726AD

JOB NO.	41726
SCALE	1:24
DATE	
DRAWN BY	DHE 19DEC23
CHECKED BY	THS 20DEC23
SHEET SIZE	D
SHEET NO.	1 OF 1

View File Created 17-JUN-2024 07:25:36