PUMPER

BODY
Pumper, PUC, Aluminum

CHASSIS
Enforcer Chassis, PUC

CHASSIS

AXLE, FRONT, CUSTOM
28,000 Lb TAK-4 Axle

AXLE, REAR
31,000 Lb Meritor RS30-185 Axle

ENGINE
510 HP Paccar MX13 Engine

TRANSMISSION
ALLison 6th Gen, 4000 EVS P

BUMPER
19" Extended Stainless Steel

CAB
7010 Enforcer Cab

BODY

TOTAL TANK CAPACITY
1000 Gallon New York Style Poly Tank

WATER CAPACITY
980 Gallons of Water

FOAM CELL CAPACITY
20G Foam Cell

COMPT, PUMPER, REAR
33.50" FF Rollup Rear Compt

COMPT, PUMPER, LEFT SIDE
214" Rollup Full Height/Depth Front & Rear

COMPT, PUMPER, RIGHT SIDE
214" Rollup Full Height/Depth Front & Rear

FIRE SUPPRESSION

PUMPHOUSE
Control Zone, PUC

PUMP
1500 GPM Pierce PUC

CROSSLAYS, 1.50"
(2) 1.50" Standard Capacity

CROSSLAYS, 2.50"
(1) 2.50" Standard Capacity

SPEEDLAYS
Speedlays Not Required

GENERATOR
Generator Not Required

FOAM SYSTEM
Husky 3 Single Agent Foam System

SAFETY

Side Roll and Frontal Impact Protection

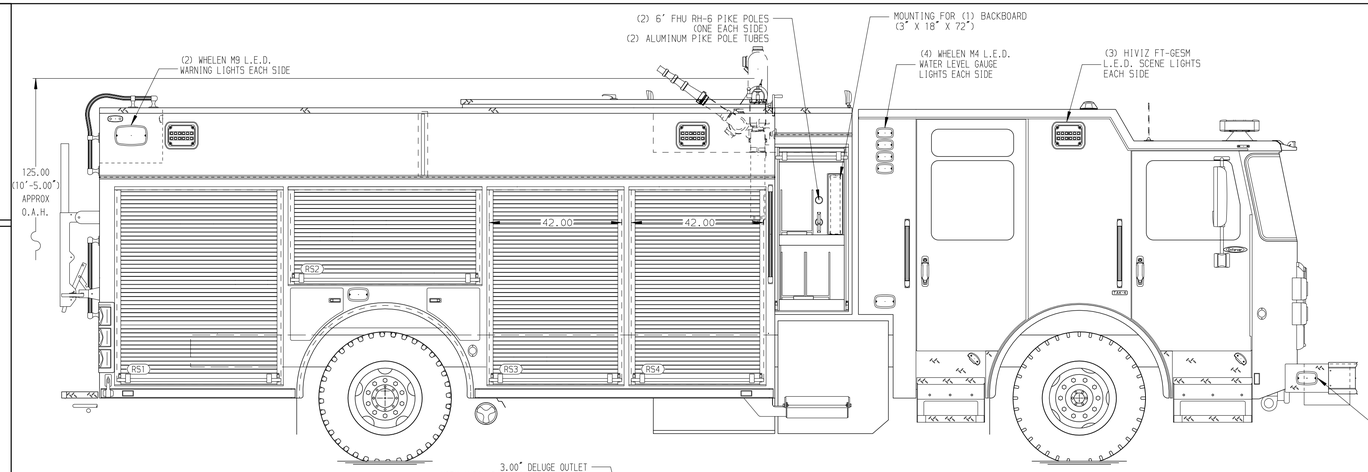

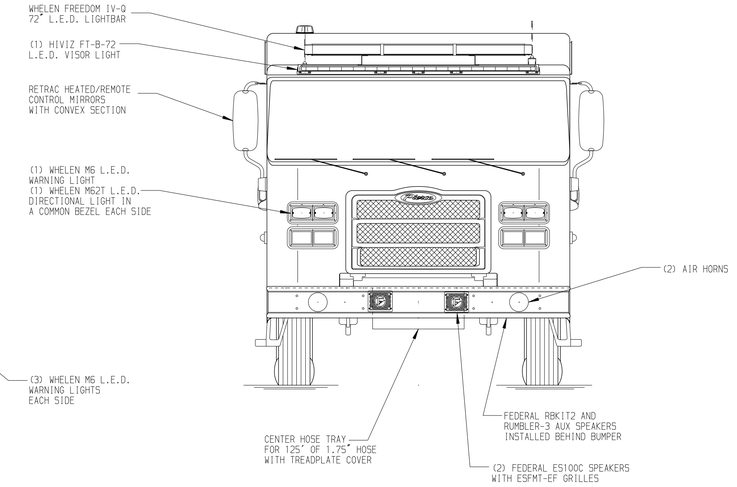

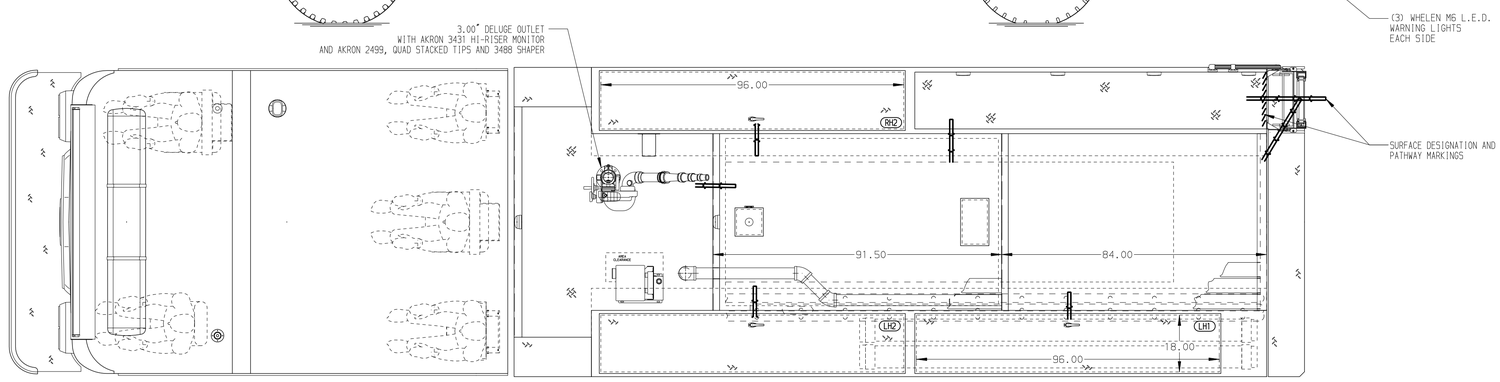

HOSEBED CAPACITY

BED 1
300' OF 3.00" D.J. POLY HOSE

BED 2
1000' OF 5.00" D.J. POLY HOSE

BED 3
300' OF 1.75" D.J. POLY HOSE

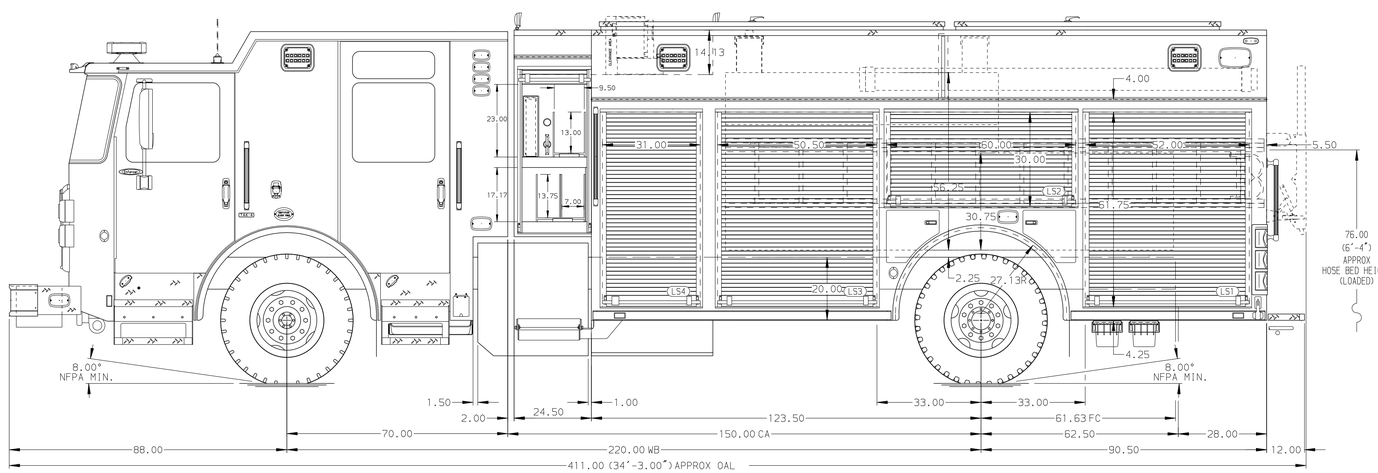

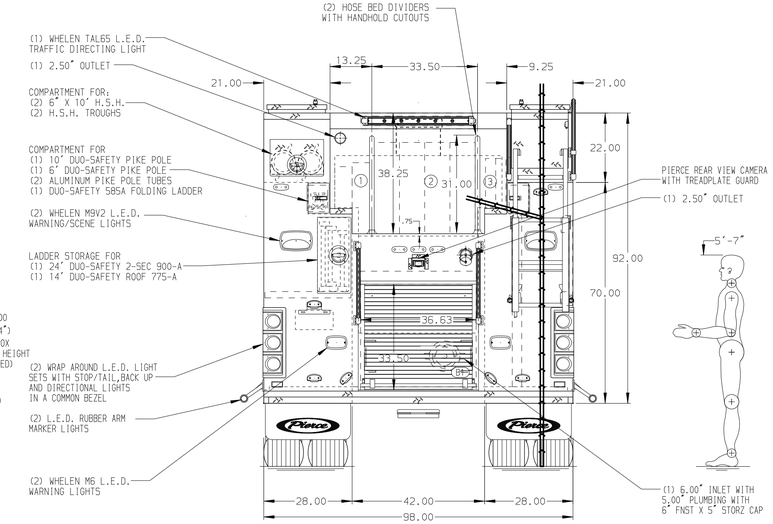

NOTE

DIMENSIONS SHOWN ARE APPROXIMATE AND ARE SUBJECT TO MINOR DEVIATIONS AS MAY OCCUR OR BE NECESSARY IN CONSTRUCTION.
MINOR DETAILS NOT SHOWN.

1. ONE 1.50 OUTLET WITH 2.00 PIPING AND SWIVEL LOCATED IN CENTER BUMPER TRAY
2. SHORELINE RECEPTACLE WITH KUSSMAUL SUPER AUTO-EJECT LOCATED ON DRIVER SIDE OF THE CAB
3. AIR INLET WITH DISCONNECT COUPLING IN THE DRIVER STEP
4. BATTERY CHARGER LOCATED BEHIND DRIVER'S SEAT
5. ONE ADJUSTABLE SHELF WITH SPECIAL HEIGHT/SIDES LOCATED PER ORDER
6. SIX ADJUSTABLE SHELVES LOCATED PER ORDER
7. FOUR TILT/SLIDE-OUT TRAYS LOCATED PER ORDER
8. FOUR FLOOR MOUNTED SLIDE-OUT TRAYS WITH SIDE SLIDES LOCATED PER ORDER
8. ONE FLOOR MOUNTED SLIDE-OUT TRAY LOCATED PER ORDER
9. ONE CTECH FOUR DRAWER ASSEMBLY LOCATED PER SHOP ORDER
10. ONE SLIDE-OUT TOOLBOARD LOCATED PER SHOP ORDER
11. PAC TRAC LOCATED IN COMPARTMENT PER ORDER
12. EIGHT 15/20A 120V RECEPTACLES LOCATED PER ORDER
13. ONE TOOL MOUNTING TURNTABLE LOCATED PER ORDER

REV	DATE	BY	CH
7	28MAY26	BTH	SJS
6	17NOV25	MPM	SJS
5	17OCT25	BTH	GKH

CHASSIS DATA	
MAKE	PIERCE
MODEL	ENFORCER

Pierce MANUFACTURING INC.

TITLE	Pierce PUC Pumper Approval Drawing -
FOR	City of Otsego -
DWG NO.	41747AD

JOB NO.	41747
SCALE	1:24
DATE	
DRAWN BY	BTH 01AUG25
CHECKED BY	IPR 5AUG25
SHEET SIZE	D
SHEET NO.	1 OF 1

View File Created 28-MAY-2026 10:25:21