PUMPER

BODY
Medium Aluminum 2nd Gen Pumper

CHASSIS
Saber FR Chassis

CHASSIS

AXLE,FRONT,CUSTOM
18,000 lb Dana Axle

AXLE,REAR
27,000 lb Dana Axle

ENGINE
510 HP Paccar MX13 Engine

TRANSMISSION
Allison 6th Gen, 4000 EVS P

BUMPER
16" Extended Stainless Steel

CAB
6010 Saber FR Cab

BODY

WATER TANK
1000 Gallon Poly Water Tank

COMPT,PUMPER,REAR
37.75" FF RollUp Rear Compt

COMPT,PUMPER,LEFT SIDE
152" RollUp Full Height Front & Rear FDLER

COMPT,PUMPER,RIGHT SIDE
152" RollUp Full Height Front & Rear FDLER

FIRE SUPPRESSION

PUMPHOUSE
45" Control Zone Side Mount

PUMP
1250 GPM Darley PSM

CROSSLAYS,1.50"
1.50" Crosslays Not Required

CROSSLAYS,2.50"
2.50" Crosslay Not Required

SPEEDLAYS
(2) 1.50" W/Tray Std. Capacity

GENERATOR
Generator Not Required

Foam System
Foam System Not Required

Foam Cell
Foam Cell Not Required

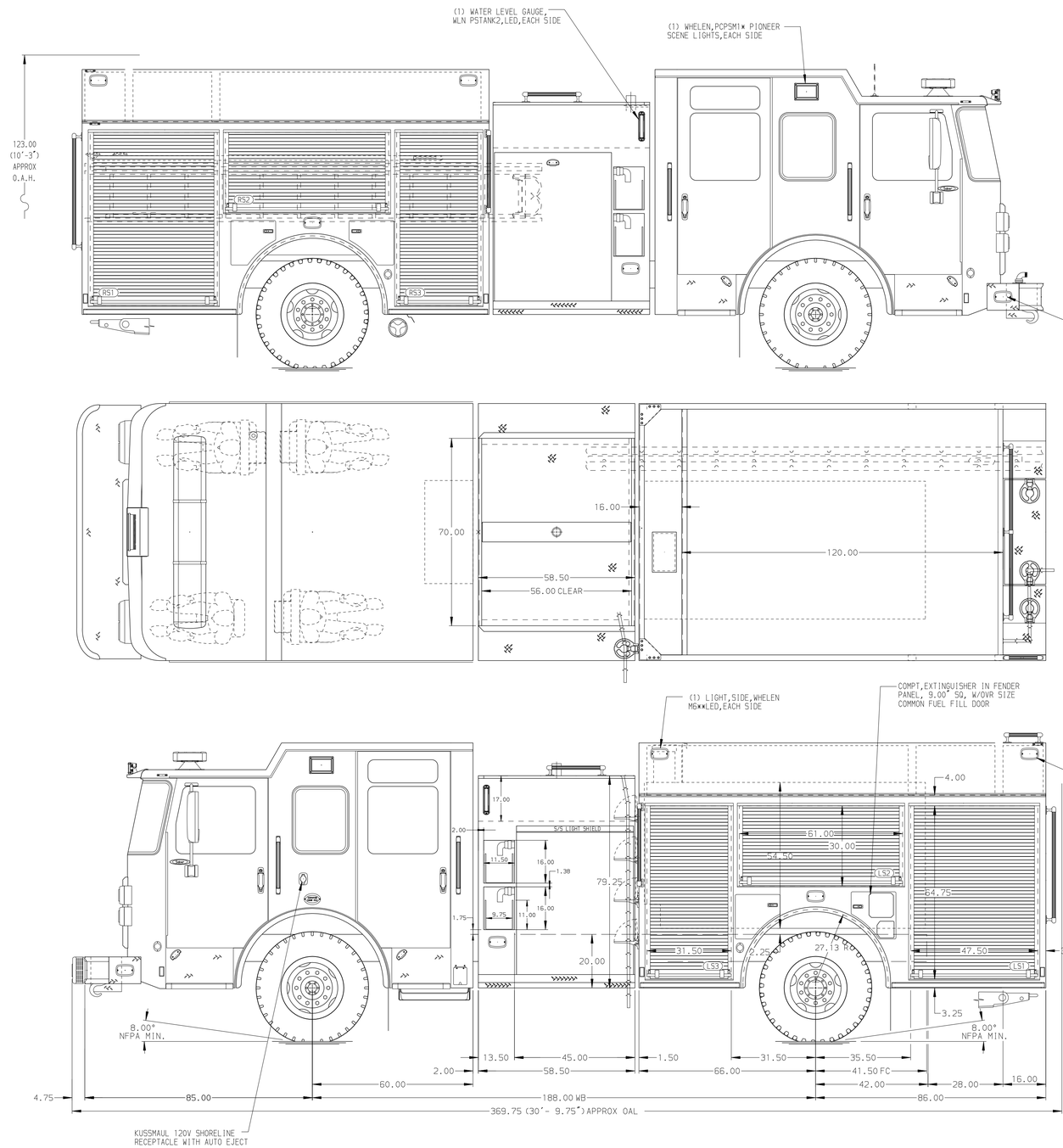

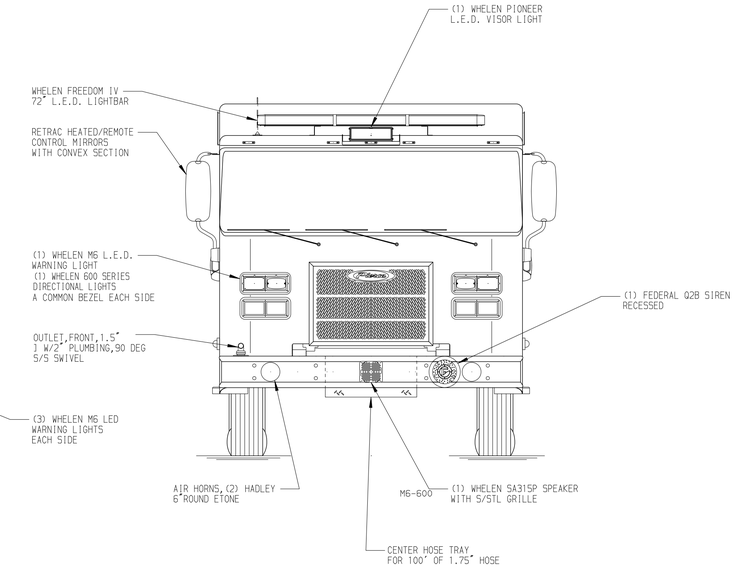

HOSEBED CAPACITY

BED 1
200' OF 2.50" D.J. POLY HOSE

BED 2
500' OF 3.00" D.J. POLY HOSE

BED 3
1000' OF 5.00" D.J. POLY HOSE

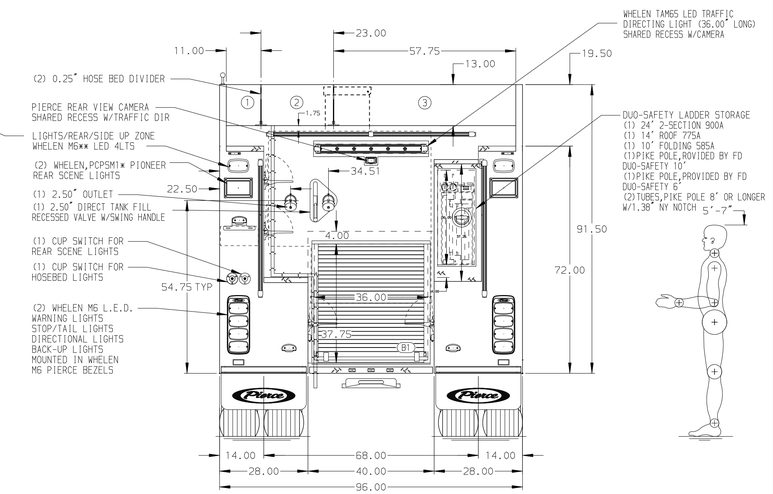

NOTE
DIMENSIONS SHOWN ARE APPROXIMATE AND ARE SUBJECT TO MINOR DEVIATIONS AS MAY OCCUR OR BE NECESSARY IN CONSTRUCTION.
MINOR DETAILS NOT SHOWN.

REV	DATE	BY	CH
B	25AUG25	RHU	CCS
A	28MAY25	RHU	CCS

CHASSIS DATA	–
MAKE	PIERCE
MODEL	SABER FR
TITLE	Pierce Pumper Approval Drawing –
FOR	Kilgore Fire Department –
DWG NO.	41751AD

Pierce MANUFACTURING INC.

JOB NO.	41751
SCALE	1:24
DATE	
DRAWN BY	VHO
DATE	22APR25
CHECKED BY	MMF
DATE	23APR25
SHEET SIZE	D
SHEET NO.	1 OF 1

View File Created 26-AUG-2025 07:10:01