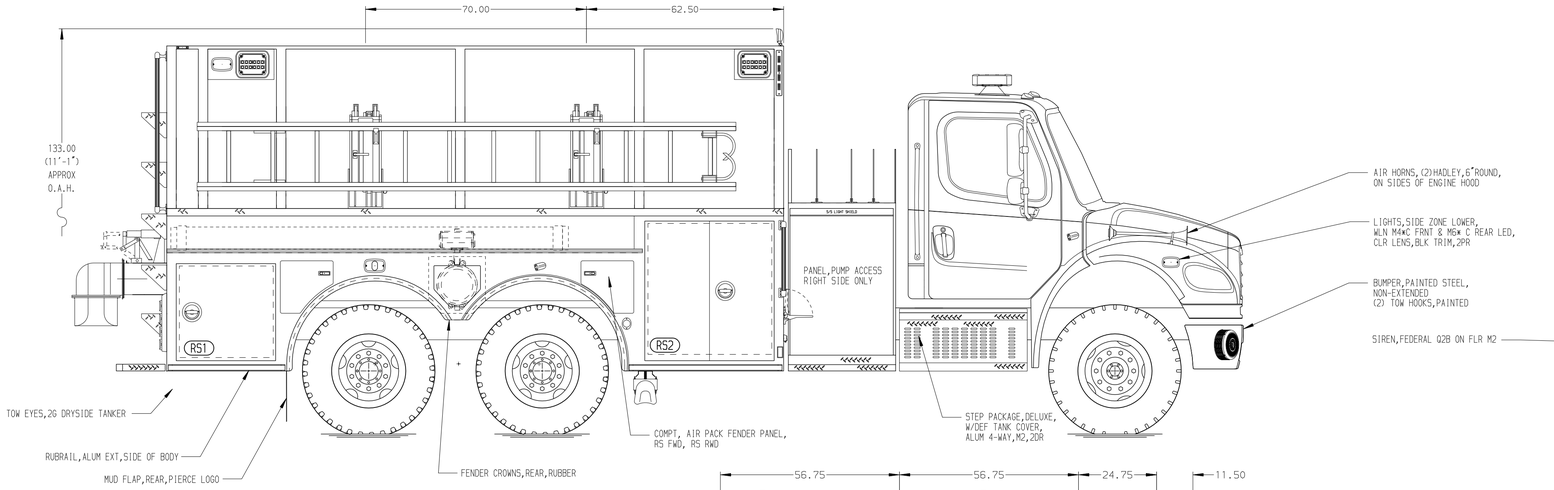

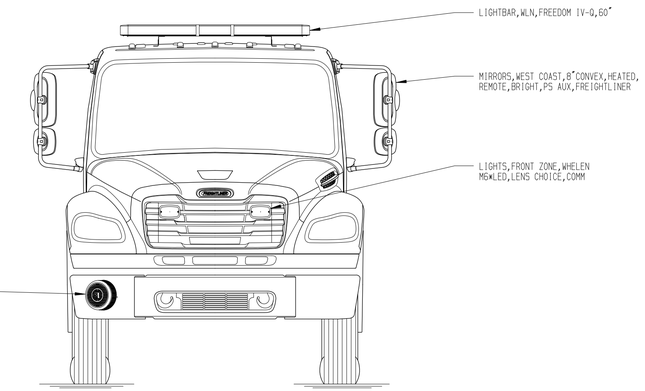

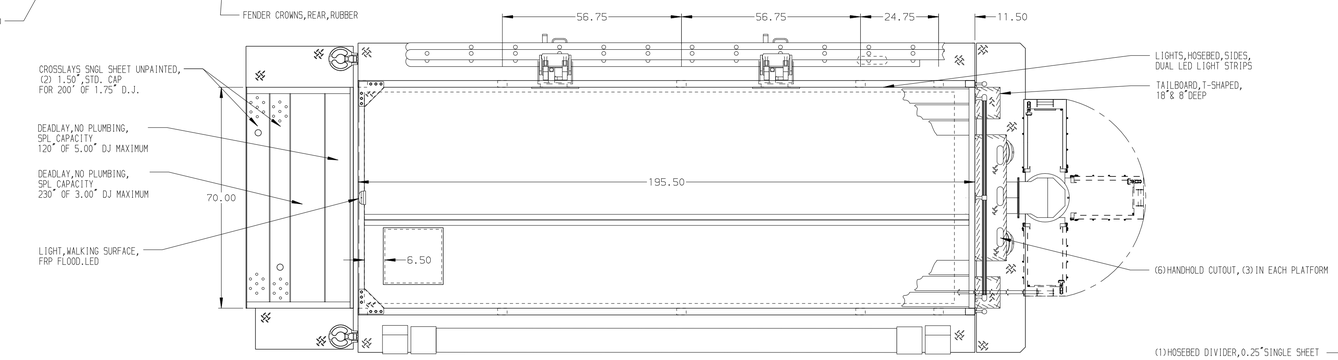

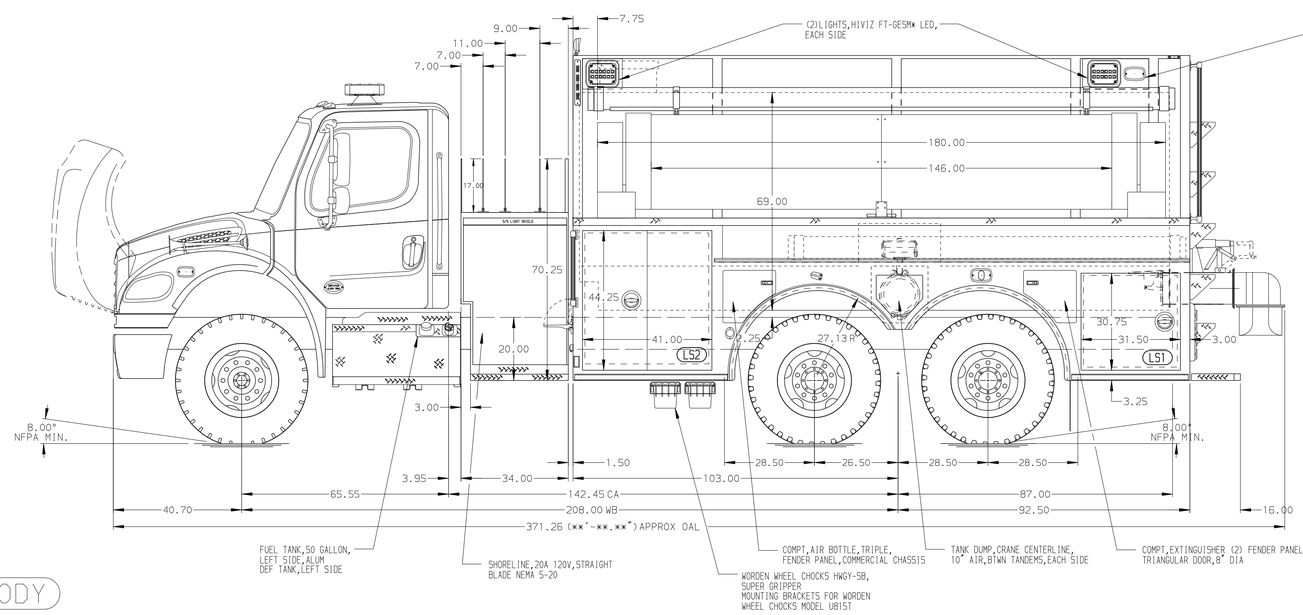

HOSEBED CAPACITIES

1. 200' OF 3.00" D.J. POLY HOSE
2. 1000' OF 5.00" D.J. POLY HOSE

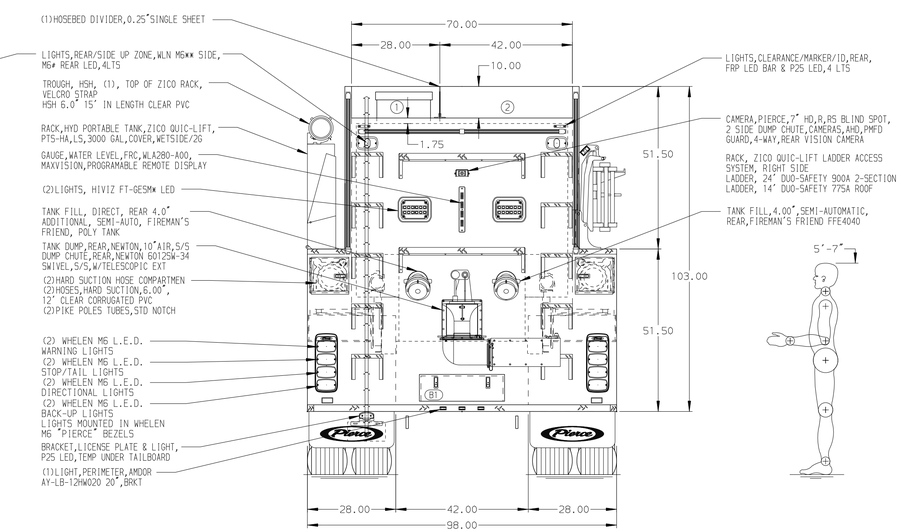

ALUMINUM BODY

NOTE

DIMENSIONS SHOWN ARE APPROXIMATE AND ARE SUBJECT TO MINOR DEVIATIONS AS MAY OCCUR OR BE NECESSARY IN CONSTRUCTION.
MINOR DETAILS NOT SHOWN.

REV	DATE	BY	CH
1	10DEC25	ADP	JAP
2	21NOV25	ADP	JAP
3	23SEP25	VHO	JAP
4	28JUL25	ADP	AJA

CHASSIS DATA — MAKE: FL — MODEL: M2-106 6X4

Pierce MANUFACTURING INC.

TITLE: 1500-D-3000P,3000G WATER,NO FOAM,195"DRY SIDE TANKER
34"SIDE CONTROL,(2)1.50 CROSSLAYS,(2)DEADLAY SPL CAP

FOR: MUMFORD FIRE DISTRICT
MUMFORD,NY

DWG NO.: 41808AD

JOB NO.	41808
SCALE	1:24
DATE	
DRAWN BY	ADP
15JUL25	
CHECKED BY	AJA
23JUL25	
SHEET SIZE	D
SHEET NO.	1 OF 1

View File Created 11-DEC-2025 07:17:41