PASSENGER'S SIDE COMPARTMENTS CONTAIN THE FOLLOWING:

COMPARTMENT RS1 CONTAINS:
-RACK, SPARE SCBA BOTTLE, 6.50", RIGHT SIDE COMPARTMENT, LIGHT RESCUE/PMFD

COMPARTMENT RS2 CONTAINS:
-TRAY, FLOOR MOUNTED, UTILITY, ONE WAY SLIDE-OUT, 500LB, 3" SIDES, 1/2 TRANS

COMPARTMENT RS4 CONTAINS:
-EXTENDED COMPARTMENT FLOORS, BOLT-IN STYLE
-TRAY, FLOOR MOUNTED, UTILITY, ONE WAY SLIDE-OUT, 500LB, 3" SIDES, 1/2 TRANS

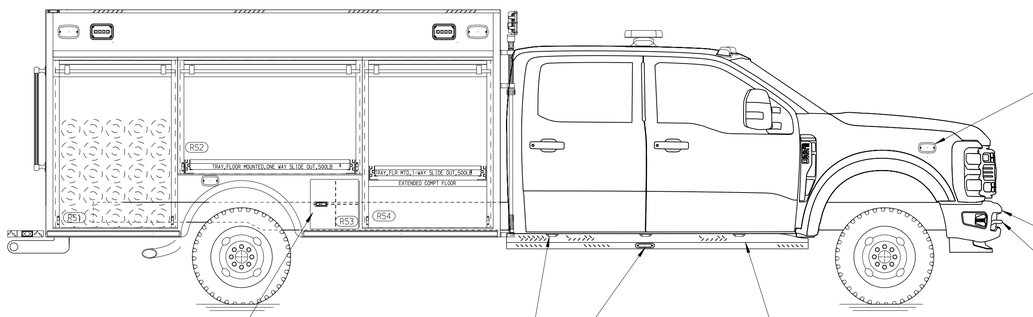

COMPT, STORAGE FENDER PANEL, MINI PUMPER, LIGHT RESCUE STORAGE RACK, FOUR (4) SCBA BOTTLES, 7.38"X7.38" FOR FENDER COMPT, MINI PUMPER, EACH SIDE

LIGHTS, CAB & CRW CAB ACS STPS, P25, LED, GLTS, FORD, F450/550

LIGHTS, SIDE, WLN W10NSMCx LED, CHROME FLANGE, MTD IN RUB RAIL, EACH SIDE

STEP/RUNNING BOARD PKG, ALM 4-WAY, F550, 4-DR, (PIERCE BUILT)

LIGHTS, SIDE ZONE LOWER, WLN M4xC LED, CLEAR LENS 2PR

CUP SWITCH FOR LIGHT, HIVIZ FT-SL-30-x-x, FRC POLE MT, EACH SIDE

BUMPER, NON-EXTENDED, CHROME PLATED, FORD SUPER DUTY

TOW EYES/HOOKS, PAINTED BLACK - FORD SUPER DUTY

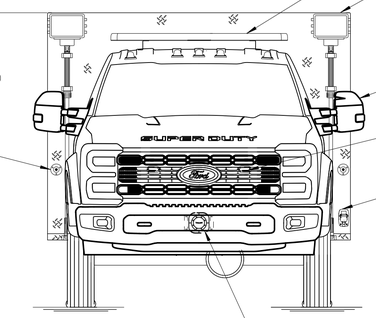

LIGHTBAR, WLN, JUSTICE, LED, 8-R, 2-W, LED, CLEAR LENS

LIGHTS, HIVIZ FT-SL-15-x-x, 12 VDC, EACH SIDE

MIRRORS,TELESCOPIC,W/POWER EQUIP GROUP, W/SIGNAL/CLEARANCE LAMPS,FORD SUPER DUTY

LIGHTS, FRONT ZONE, WLN LINZ6x, LED, COMM

SHORELINE, 20A 120V, KUSSMAUL CHF AUTO EJECT, 091-55-20-120, 091-55-266-XX COVER

SPEAKER, WLN, SA315P, MOUNTED BEHIND BUMPER, 100 WATT, FORD NON-EXT

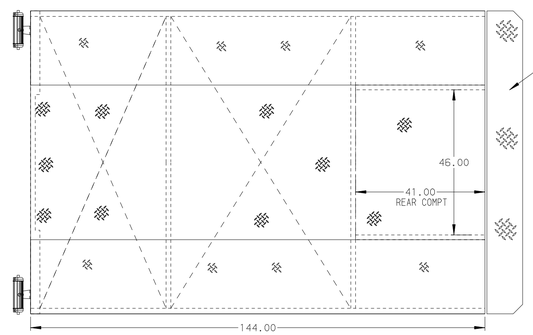

TAILBOARD,12.00" DEEP, LIGHT RESCUE, NON-WALK-IN

REAR COMPARTMENT B1 CONTAINS THE FOLLOWING:

-RACK, SPARE SCBA BOTTLE, 6.50", REAR COMPARTMENT, LIGHT RESCUE/PMFD

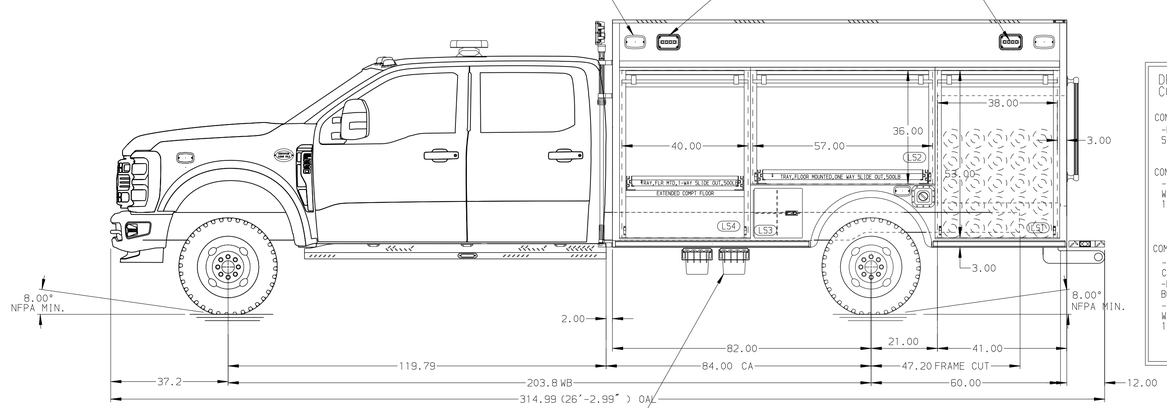

LIGHTS, SIDE, WLN M6xx LED, TRM FET, EACH SIDE

LIGHTS, SIDE SCENE, HIVIZ FT-6SMJR LED, EACH SIDE

CHOCKS, WHEEL, WORDEN HWG- SB, SUPER GRIPPER MOUNTING BRACKETS, CHOCKS, WORDEN SAFETY, MODEL U815T

DRIVER'S SIDE COMPARTMENTS CONTAIN THE FOLLOWING:

COMPARTMENT LS1 CONTAINS:
-RACK, SPARE SCBA BOTTLE, 6.50", LEFT SIDE COMPARTMENT, LIGHT RESCUE/PMFD

COMPARTMENT LS2 CONTAINS:
-TRAY, FLOOR MOUNTED, UTILITY, ONE WAY SLIDE-OUT, 500LB, 3" SIDES, 1/2 TRANS

COMPARTMENT LS4 CONTAINS:
-CHARGER, SNGL SYS, KUSSMAUL, CHIEF 091-266-12-40, 40 AMP
-EXTENDED COMPARTMENT FLOORS, BOLT-IN STYLE
-TRAY, FLOOR MOUNTED, UTILITY, ONE WAY SLIDE-OUT, 500LB, 3" SIDES, 1/2 TRANS

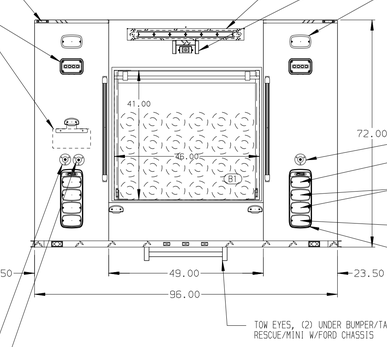

LIGHTS, CLEARANCE/MARKER/ID, REAR, FRP LED BAR & P25 LED 4LTS

LIGHTS, REAR SCENE, HIVIZ FT-6SMJR-x, SURFACE MT

BRACKET, LICENSE PLATE & LIGHT, P25 LED, STAINLESS BRKT

LIGHT, TRAFFIC DIRECTING, WLN TAL65, 36.00" LONG, TACTLS LOCATION, TDL, SURFACE MOUNTED OVER REAR DOOR WITH TREADPLATE BOX

CAMERA, PIERCE, 7" HD, R, CAMERA, FORD F-SERIES CHASSIS SPECIFIC, AHD GUARD, 4-WAY, REAR VISION CAMERA

LIGHTS, REAR/SIDE UP ZONE, WLN M6xx LED 4LTS

S/S CUP SWITCH PS SCENE LIGHTS

LIGHTS, REAR ZN LWR, WLN M6xC LED, CLEAR LENS, FOR TAIL LT HOUSING

LIGHTS, TAIL, WLN M62BTTx RED STOP/TAIL & M62Tx AMBER DIR ARW FOR HSG

LIGHTS, BACKUP, WLN M62BU, LED, FOR TAIL LT HOUSING

BEZELS, WLN, (2) M6 CHROME PIERCE, FOR MTG (4) WLN M6 LIGHTS

TOW EYES, (2) UNDER BUMPER/TAILBOARD, RESCUE/MINI W/FORD CHASSIS

S/S CUP SWITCH DS SCENE LIGHTS

S/S CUP SWITCH REAR SCENE LIGHTS

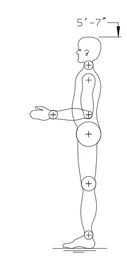

ALUMINUM BODY

NOTE
DIMENSIONS SHOWN ARE APPROXIMATE AND ARE SUBJECT TO MINOR DEVIATIONS AS MAY OCCUR OR BE NECESSARY IN CONSTRUCTION.
MINOR DETAILS NOT SHOWN.

REV.	DATE	BY	CHK'D	CHASSIS DATA
				CHASSIS
B	030CT25	VHO	CCS	FORD
A	25AUG25	VHO	RWI	MODEL F-550 4X4

Pierce MANUFACTURING INC.
BRADENTON, FLORIDA

TITLE	12' RESCUE,NON-WALK-IN –	JOB NO.	41939
		DATE	SCALE 1:24
FOR	INDIANAPOLIS FIRE DEPARTMENT INDIANAPOLIS, INDIANA	08AUG25	DRAWN BY VHO
		14AUG25	CHK'D BY AJA
DRWG. NO.	41939AD	SHEET NO. 1 OF 1	SHEET SIZE D

View File Created 04-DEC-2025 07:25:02