PUMPER

BODY
Medium Aluminum 2nd Gen Pumper

CHASSIS
Saber FR Chassis

CHASSIS

AXLE,FRONT,CUSTOM
18,000 lb Dana Axle

AXLE,REAR
24,000 lb Dana Axle

ENGINE
510 HP Paccar MX13 Engine

TRANSMISSION
Allison 6th Gen, 4000 EVS P

BUMPER
13" Extended Painted Steel

CAB
6010 Saber FR Cab

BODY

TOTAL TANK CAPACITY
500 Gallon New York Style Poly Tank

WATER CAPACITY
500 Gallons of Water

FOAM CELL
Foam Cell Not Required

COMPT,PUMPER,REAR
30.75" FF RollUp Rear Compt

COMPT,PUMPER,LEFT SIDE
145" Lap FH/FD Front, FH Rear. FDLER

COMPT,PUMPER,RIGHT SIDE
145" Lap Low FDLER

FIRE SUPPRESSION

PUMPHOUSE
45" Control Zone Side Mount

PUMP
1500 GPM Hale QMAX

CROSSLAYS,1.50"
(2) 1.50" Standard Capacity

CROSSLAYS,2.50"
2.50" Crosslay Not Required

SPEEDLAYS
Speedlays Not Required

GENERATOR
Generator Not Required

FOAM SYSTEM
Foam System Not Required

SAFETY

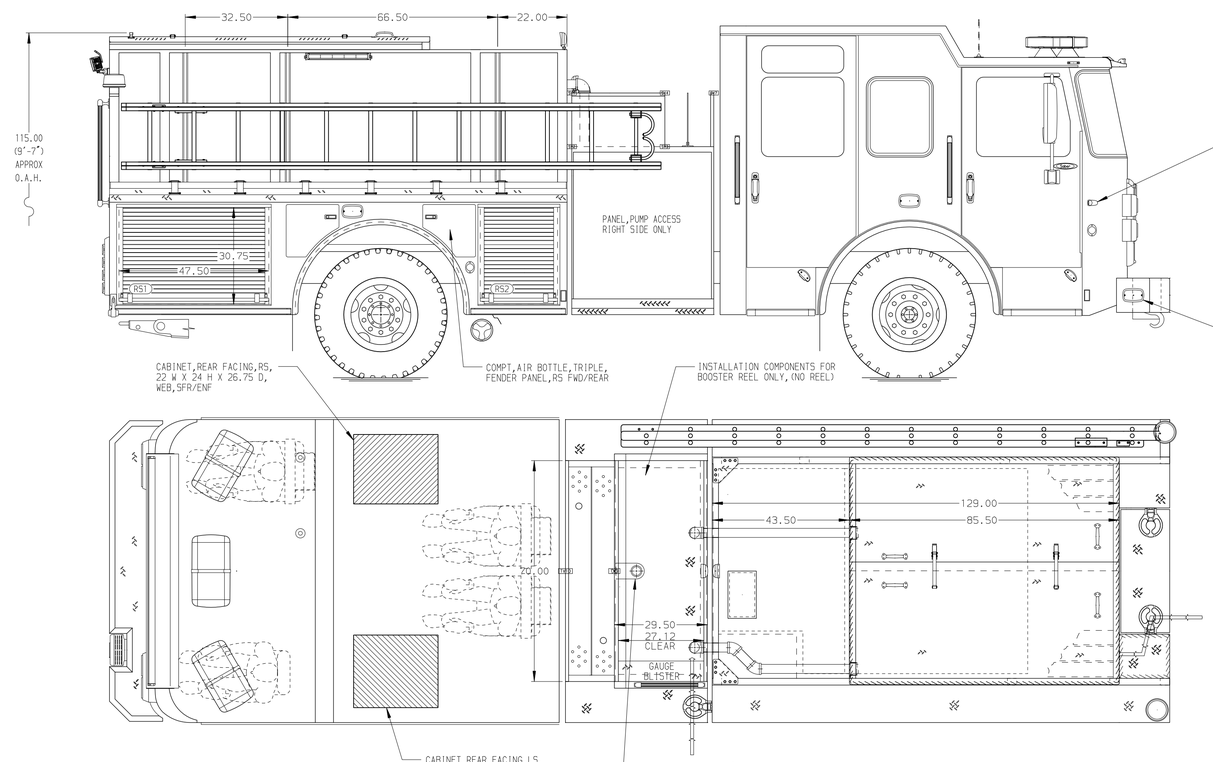

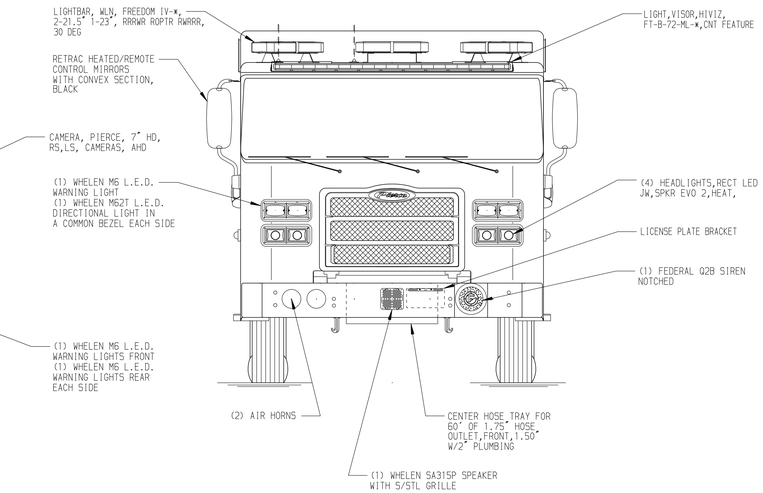

HOSEBED CAPACITIES
1 - 300' OF 2.50" D.J. POLY HOSE
2 - 800' OF 4.00" D.J. POLY HOSE
3 - 800' OF 2.50" D.J. POLY HOSE
4 - 300' OF 1.75" D.J. POLY HOSE
5 - LADDER STORAGE COMPT.
6 - STOKES BASKET COMPT.

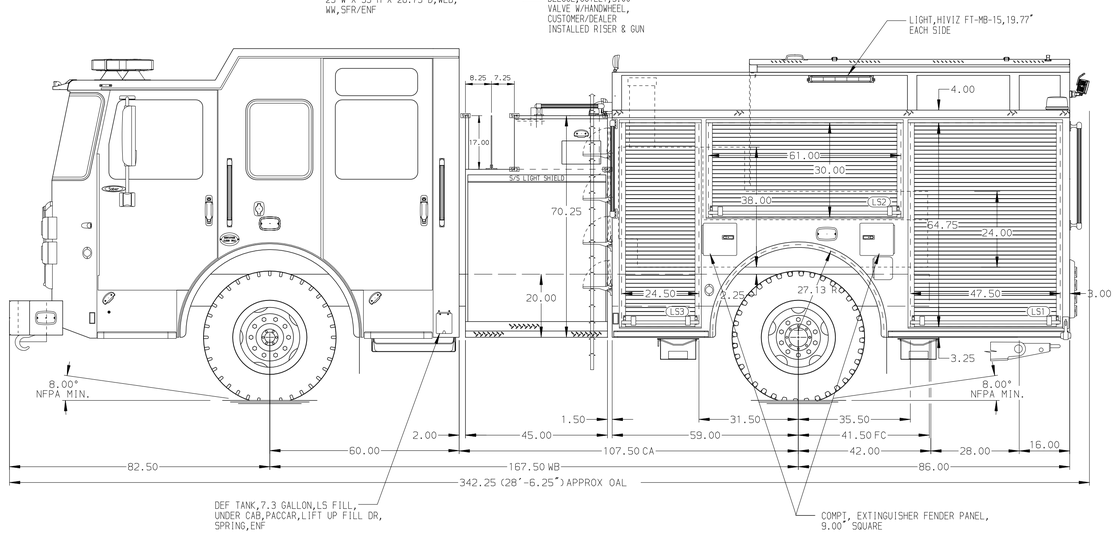

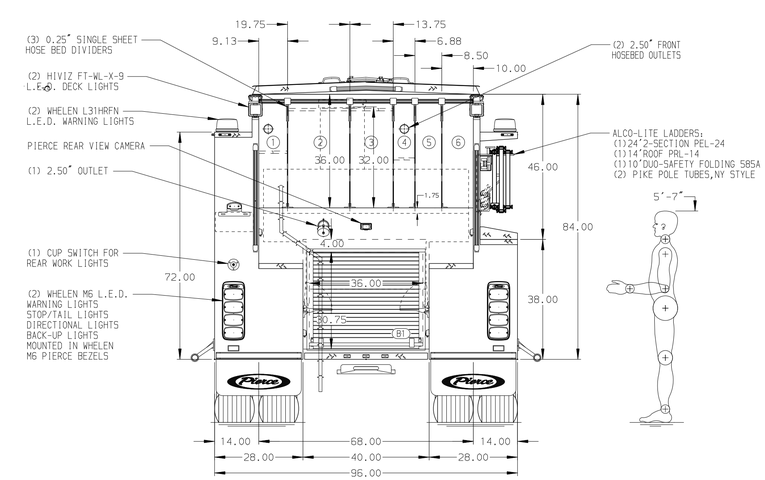

NOTE
DIMENSIONS SHOWN ARE APPROXIMATE AND ARE SUBJECT TO MINOR DEVIATIONS AS MAY OCCUR OR BE NECESSARY IN CONSTRUCTION.
MINOR DETAILS NOT SHOWN.

REV	DATE	BY	CH
3	09OCT25	TYB	MAR
2	01AUG25	ADP	MAR

CHASSIS DATA
MAKE: PIERCE
MODEL: SABER FR

Pierce MANUFACTURING INC.

TITLE: Pierce Pumper Approval Drawing
FOR: Salem Fire Department
DWG NO.: 42006AD

JOB NO. 42006
SCALE 1:24
DATE
DRAWN BY MMF 22MAY25
CHECKED BY AMI 22MAY25
SHEET SIZE D
SHEET NO. 1 OF 1

View File Created 13-OCT-2025 07:28:58