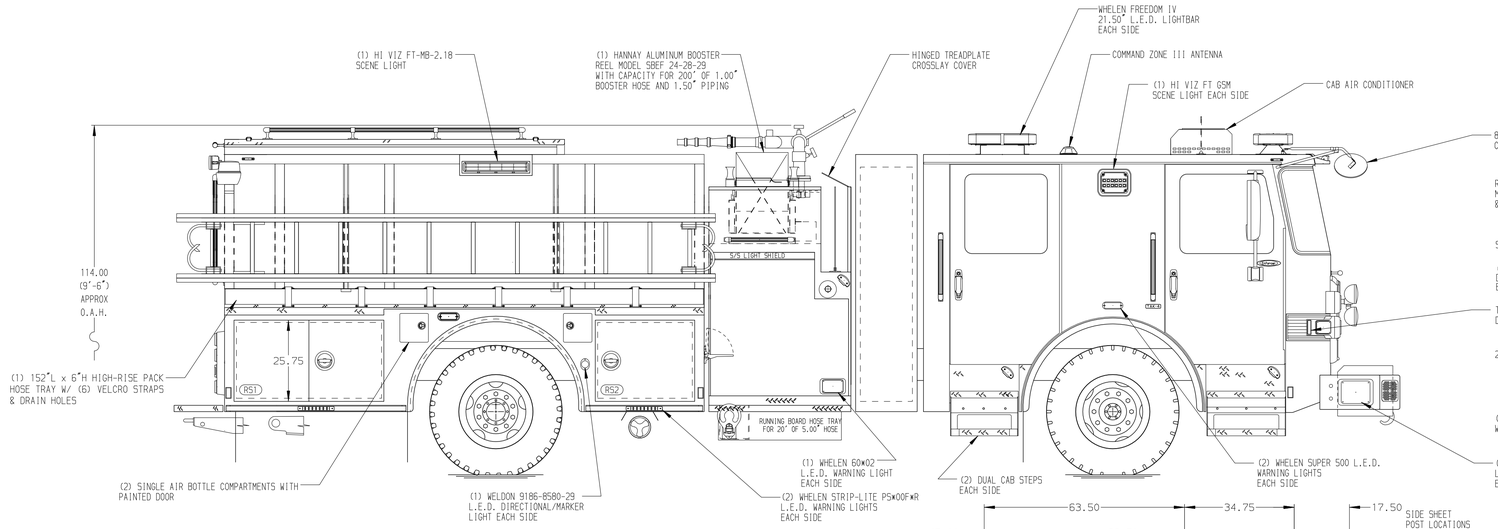

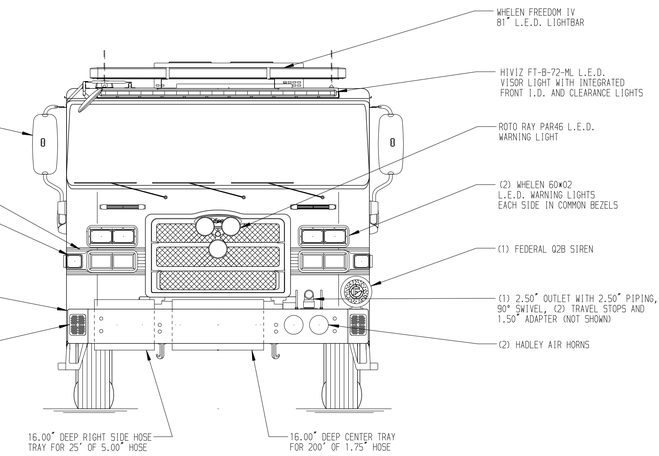

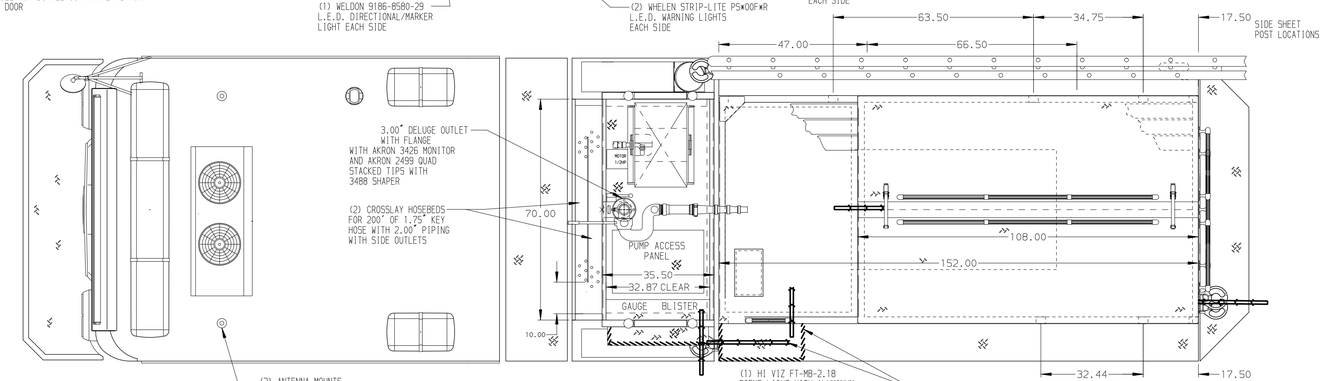

HOSEBED CAPACITIES

1. 200' OF 2.50" D.J. POLY HOSE
2. 200' OF 1.75" D.J. POLY HOSE
3. 800' OF 3.00" D.J. POLY HOSE
4. 1200' OF 5.00" D.J. POLY HOSE
5. 200' OF 1.75" D.J. POLY HOSE
6. 300' OF 2.50" D.J. POLY HOSE

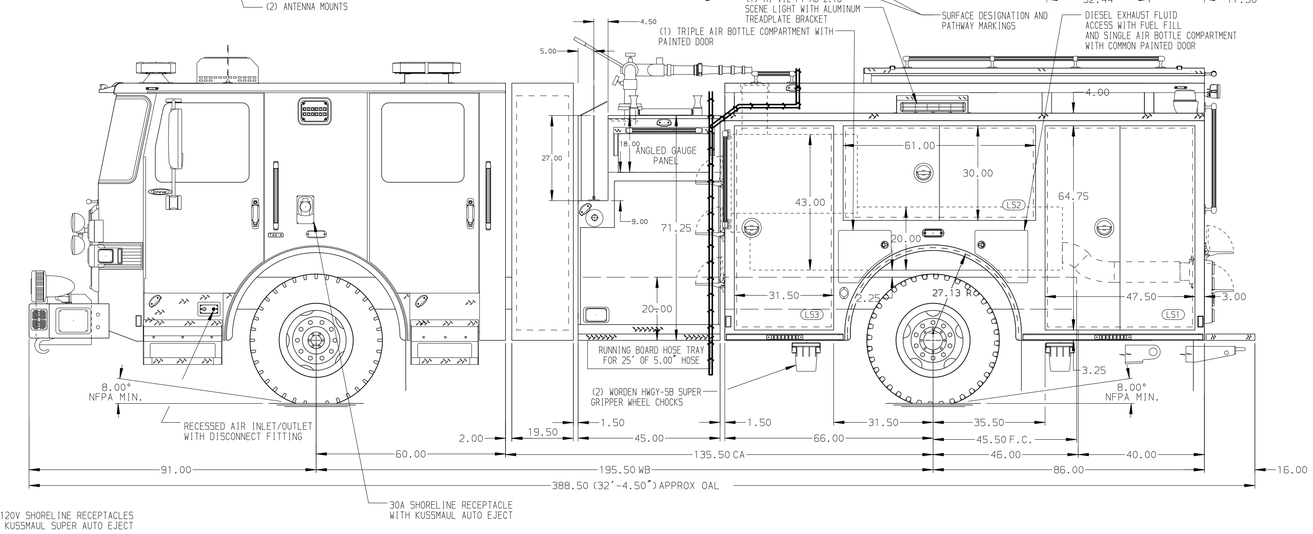

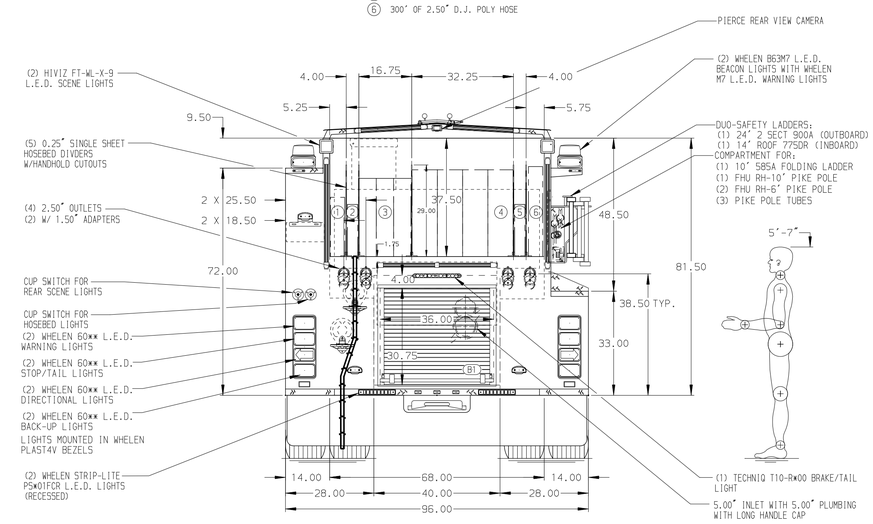

ALUMINUM BODY | MAXIMUM O.A.L. 388.50" | MAXIMUM O.A.H. 114.00" | SIDE ROLL AND FRONTAL IMPACT PROTECTION

NOTE

DIMENSIONS SHOWN ARE APPROXIMATE AND ARE SUBJECT TO MINOR DEVIATIONS AS MAY OCCUR OR BE NECESSARY IN CONSTRUCTION.
MINOR DETAILS NOT SHOWN.

1. ONE L.E.D. LIGHT STRIP LOCATED ON EACH SIDE IN THE HOSEBED

REV	DATE	BY	CH
V	22MAY24	LST	JBL
V	10APR24	LST	JBL
V	09FEB24	CDU	SMA

CHASSIS DATA
MAKE: PIERCE
MODEL: ENFORCER

Pierce MANUFACTURING INC.

TITLE: 1500-D-500 GALLON POLY, 152" FDLER PUMPER BODY (2) CROSSLAYS, RS LADDER BRACKET, BOOSTER REEL
FOR: CARY FIRE DEPARTMENT, CARY, NORTH CAROLINA
DWG NO.: 42151AD

JOB NO.	42151
SCALE	1:24
DATE	
DRAWN BY	LST 31JAN24
CHECKED BY	CDU 31JAN24
SHEET SIZE	D
SHEET NO.	1 OF 1

View File Created 24-MAY-2024 06:55:15