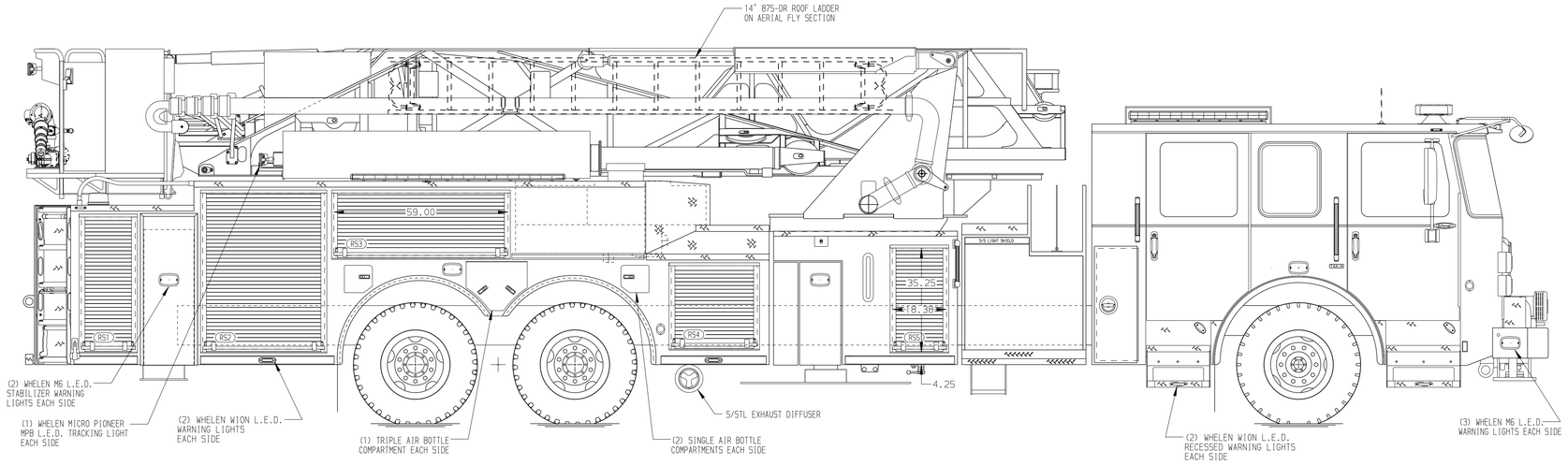

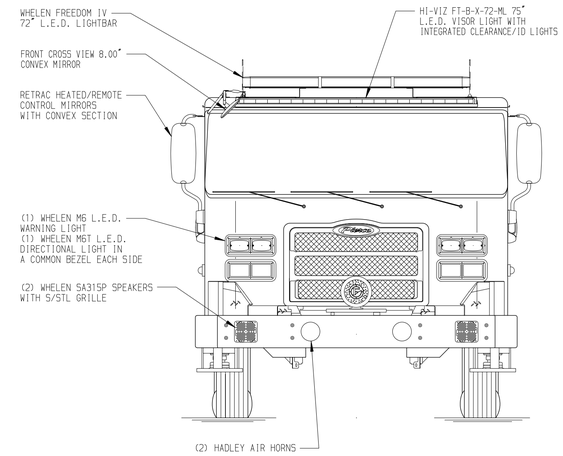

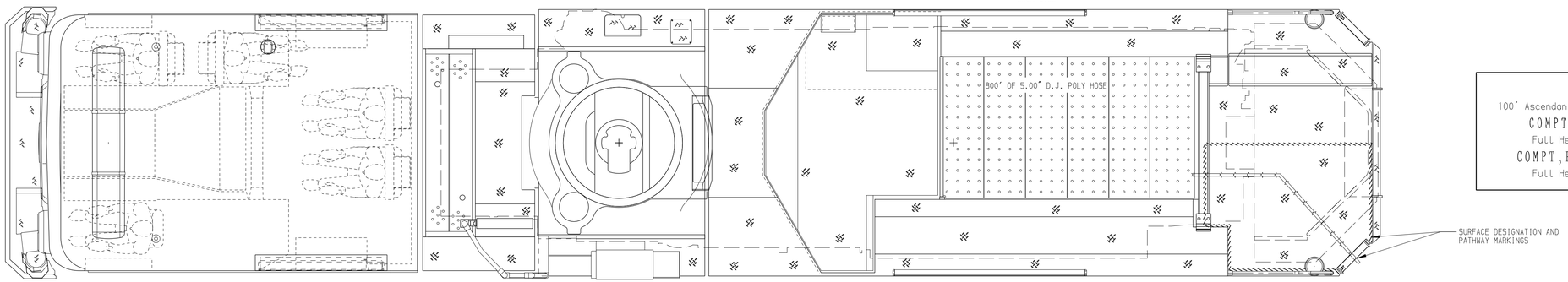

BODY	WATER TANK
100' Ascendant Aerial Tower Alum Body	300 Gallon Poly Water Tank
COMPT,DRIVER SIDE	Foam System
Full Height Rollup Doors	Foam System Not Required
COMPT,PASSENGER SIDE	Foam Cell
Full Height Rollup Doors	Foam Cell Not Required

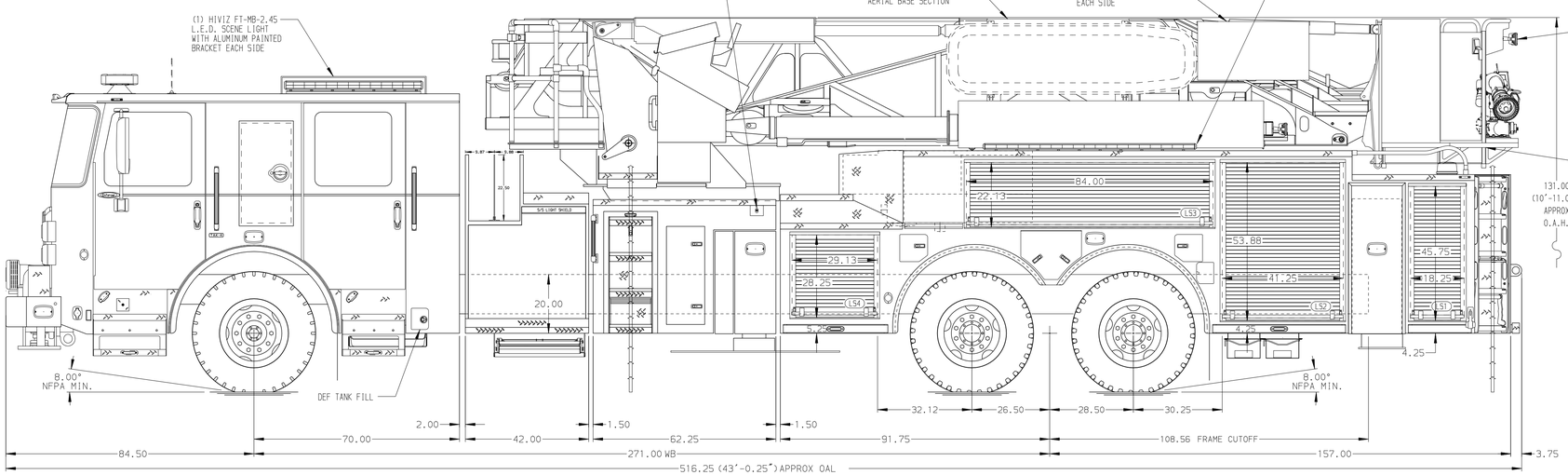

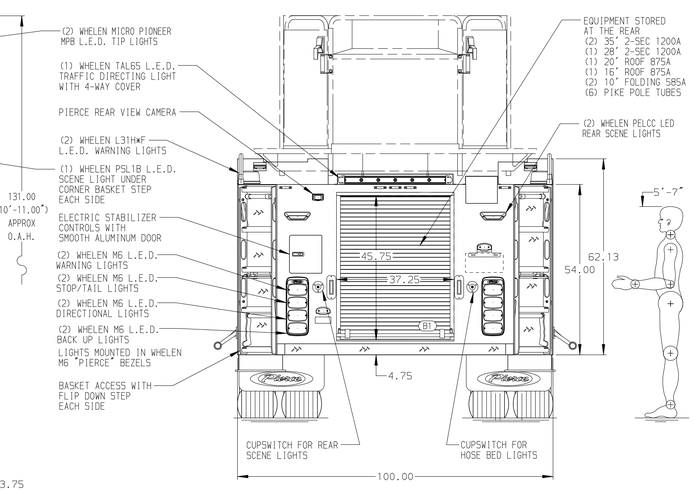

CHASSIS	CAB	AXLE,FRONT,CUSTOM	TRANSMISSION	PUMPHOUSE	CROSSLAYS,1.50"	SPEEDLAYS	SAFETY
Enforcer Chassis	7000 Enforcer Cab	24,000 Lb TAK-4 Axle	ALlison 6th Gen, 4500 EVS P	42" Control Zone Side Mount	(2) 1.50", 200' of 1.75" Hose	Speedlays Not Required	Side Roll and Frontal Impact Protection
ENGINE	BUMPER	AXLE,REAR		PUMP	CROSSLAYS,2.50"	GENERATOR	
510 HP Paccar MX13 Engine	15" Extended Painted Aluminum	54,000 Lb Meritor Axle		2000 GPM Waterous S100	2.50" Crosslay Not Required	Generator Not Required	

CUSTOMER APPROVAL

APPROVED BY: _____

DATE: _____

Pierce MANUFACTURING INC.

NOTE

DIMENSIONS SHOWN ARE APPROXIMATE AND ARE SUBJECT TO MINOR DEVIATIONS AS MAY OCCUR OR BE NECESSARY IN CONSTRUCTION.
MINOR DETAILS NOT SHOWN.

1. SHORELINE RECEPTACLE WITH KUSSMAUL SUPER AUTO-EJECT LOCATED ON DRIVER SIDE FRONT CORNER OF THE CAB
2. AIR INLET WITH DISCONNECT COUPLING IN A RECESSED ALUMINUM TREADPLATE BOX IN THE DRIVER SIDE STEPWELL
3. BATTERY CHARGER LOCATED IN CAB BEHIND DRIVER'S SEAT
4. BATTERY CHARGER INDICATOR LOCATED ON DRIVER'S SEAT RISER
5. SIX ADJUSTABLE FULL WIDTH/FULL DEPTH SHELVES IN COMPARTMENTS PER ORDER
6. FOUR SLIDE-OUT FLOOR MOUNTED TRAYS IN COMPARTMENTS PER ORDER
7. DUAL LIGHT STRIPS LOCATED IN COMPARTMENTS PER ORDER
8. NON-RAISED AERIAL PEDESTAL
9. DC POWER TO AERIAL TIP
10. 3-in-1 LYFECOMBO BRACKETS AT AERIAL BASKET
11. RUNG LIGHTING ON AERIAL LADDER
12. 2-WAY INTERCOM SYSTEM BETWEEN AERIAL TIP AND TURNTABLE

REV	DATE	BY	CH
V	09SEP24	ANZ	AST

CHASSIS DATA

MAKE: PIERCE

MODEL: ENFORCER

TITLE: 100' ASCENDANT AERIAL TOWER AND BODY ASSEMBLY
–

FOR: PIERCE FIELD UNIT
APPLETON, WI

DWG NO.: 42322AD

JOB NO.	42322
SCALE	1:24
DATE	
DRAWN BY	ANZ 02FEB24
CHECKED BY	NAK 0FEB24
SHEET SIZE	D
SHEET NO.	1 OF 1

View File Created 13-SEP-2024 08:31:23