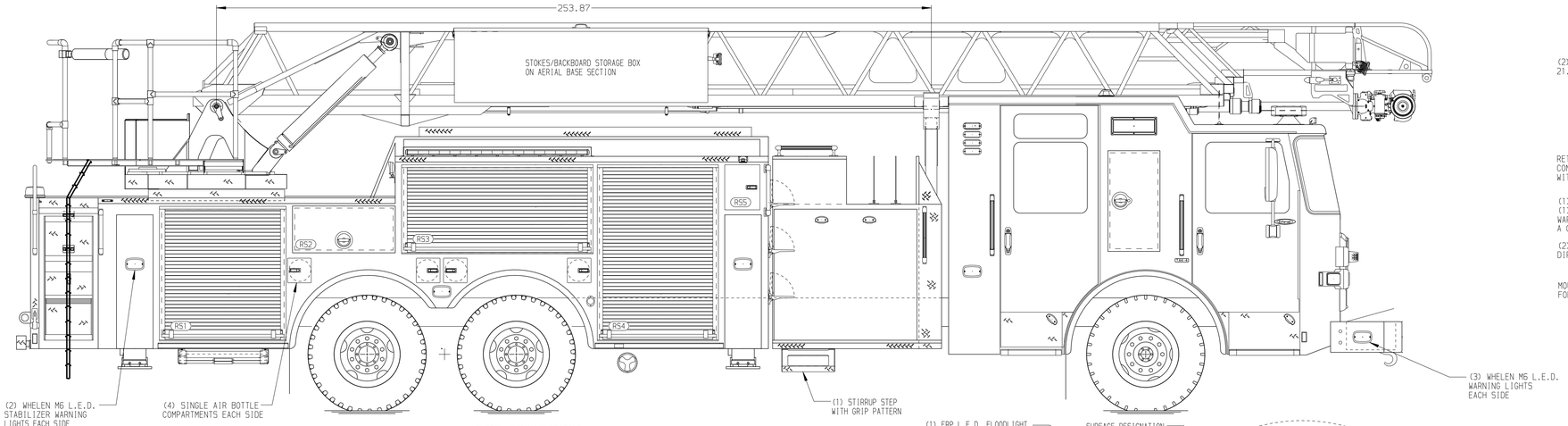

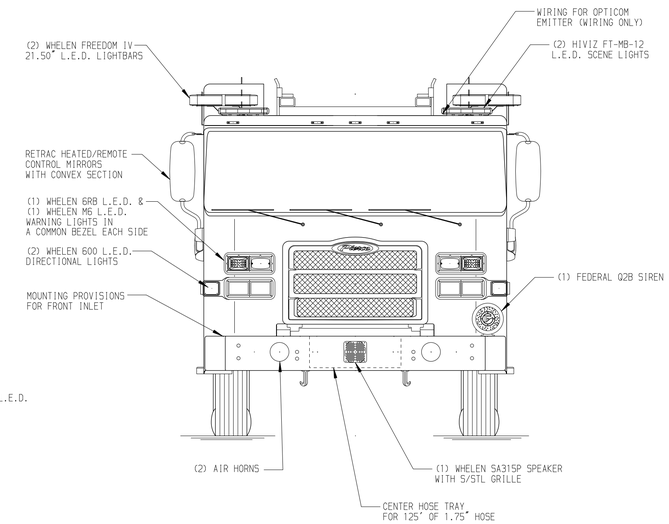

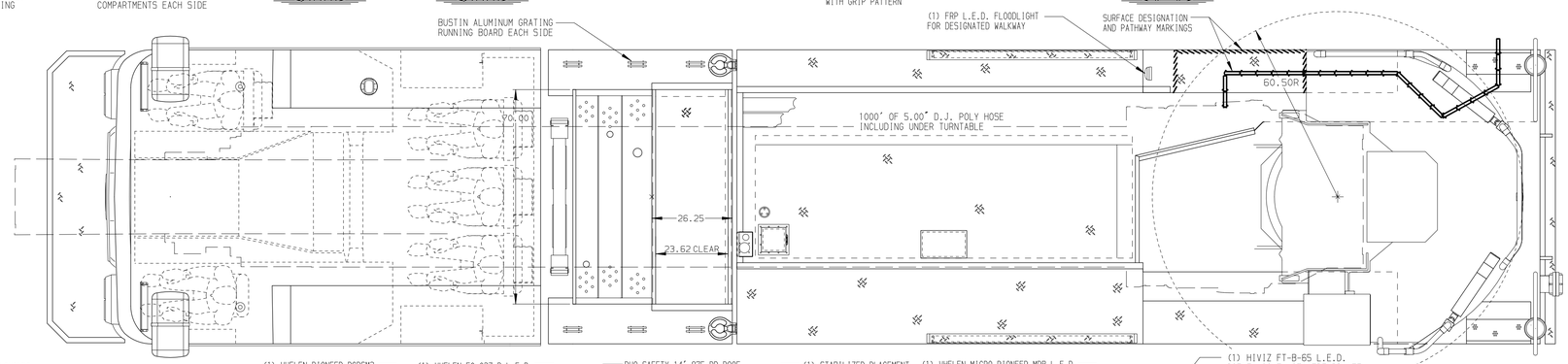

BODY	WATER TANK
107' Tandem Axle Platform Aluminum Body	500 Gallon Notched Poly Water Tank
COMPT,DRIVER SIDE FRONT	Foam System
FH/FD Rollup w/o Chute	Plumbing For Future Foam System
COMPT,DRIVER SIDE REAR	Foam Cell
FH/FD Rollup and Lift-up rearward	20 Gallon Foam Cell, Non-Reduced Water
COMPT,PASSENGER SIDE FRONT	
Full Height Rollup Forward	
COMPT,PASSENGER SIDE REAR	
Full Height Rollup and Liftup Rearward	

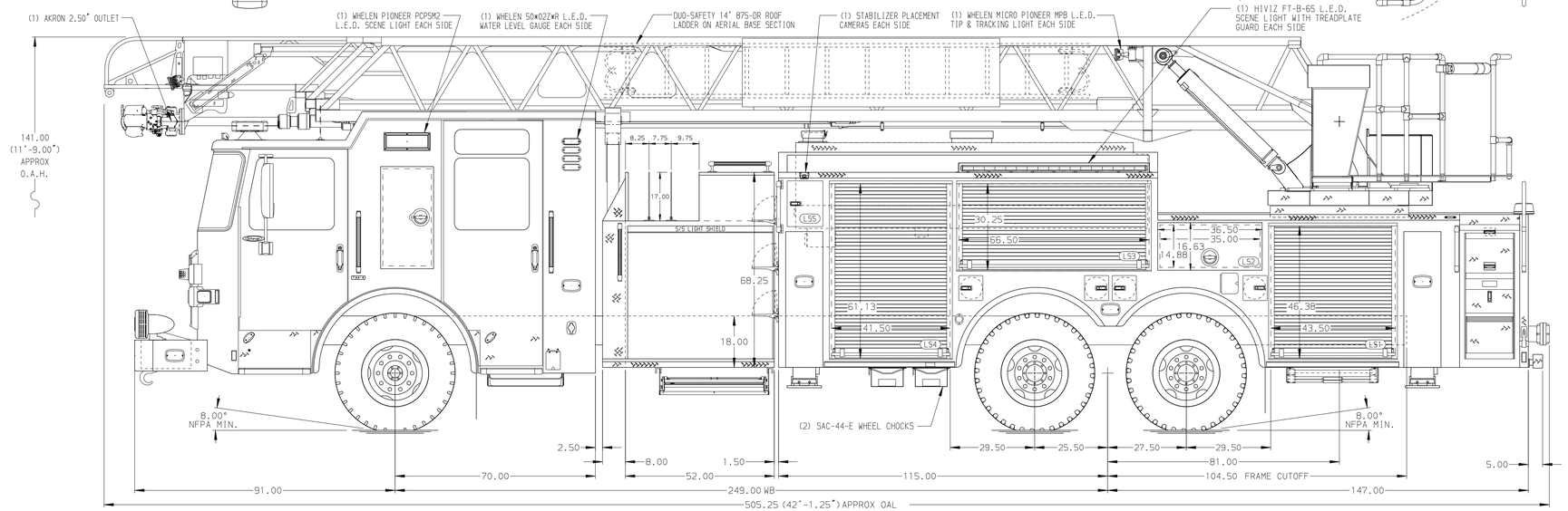

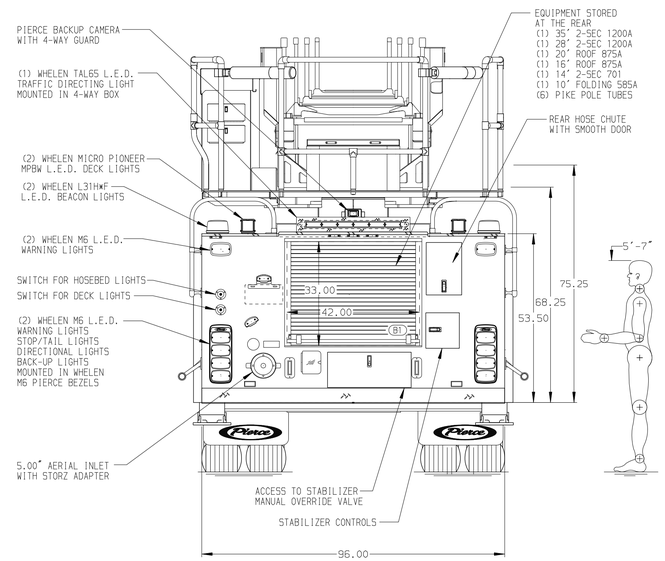

CHASSIS	CAB	AXLE,FRONT,CUSTOM	TRANSMISSION	PUMPHOUSE	CROSSLAYS,1.50"	SPEEDLAYS	SAFETY
Enforcer Chassis	7010 Enforcer Cab	22,800 Lb TAK-4 Axle	ALlison 6th Gen, 4500 EVS P	52" Control Zone Side Mount	(2) 1.75" Standard Capacity	Speedlays Not Required	Side Roll and Frontal Impact Protection
ENGINE	BUMPER	AXLE,REAR		PUMP	CROSSLAYS,2.50"	GENERATOR	
510 HP Paccar MX13 Engine	22" Extended Painted Steel	44,000 Lb Meritor Axle		2000 GPM Waterous CSU	(1) 2.50" Standard Capacity	Generator Not Required	

NOTE

DIMENSIONS SHOWN ARE APPROXIMATE AND ARE SUBJECT TO MINOR DEVIATIONS AS MAY OCCUR OR BE NECESSARY IN CONSTRUCTION.
MINOR DETAILS NOT SHOWN.

1. 21.00" LIMITED RETRACTION REQUIRED
2. ONE 1.50" OUTLET WITH 2.00" PIPING AND SWIVEL LOCATED IN CENTER BUMPER TRAY
3. SHORELINE RECEPTACLE WITH KUSSMAUL SUPER AUTO-EJECT LOCATED ON DRIVER SIDE OF CREW CAB
4. AIR INLET WITH DISCONNECT COUPLING LOCATED IN DRIVER SIDE STEP WELL
5. BATTERY CHARGER LOCATED BEHIND DRIVER SEAT
6. BATTERY CHARGER INDICATOR ON DRIVER'S SEAT RISER
7. NINE ADJUSTABLE SHELVES LOCATED IN COMPARTMENTS PER ORDER
8. THREE FLOOR MOUNTED SLIDE-OUT TRAYS LOCATED IN COMPARTMENTS PER ORDER
9. ONE SLIDE-OUT TOOLBOARD LOCATED IN COMPARTMENT PER ORDER
10. TWO VERTICAL PARTITIONS LOCATED IN COMPARTMENTS PER ORDER
11. TWO TILT/SLIDE-OUT TRAYS LOCATED IN COMPARTMENTS PER ORDER
12. TWO RECEPTACLES LOCATED PER ORDER
13. 1500 GPM HIGH FLOW WATERWAY
14. 3.00" RAISED AERIAL PEDESTAL
15. TECNIQ RUNG LIGHTING AT AERIAL DEVICE
16. FIRE RESEARCH 2-WAY INTERCOM

REV	DATE	BY	CH
3	26AUG24	ANZ	AST
2	12AUG24	ANZ	AST

CHASSIS DATA
MAKE: PIERCE
MODEL: ENFORCER

Pierce MANUFACTURING INC.

TITLE: 107' ASCENDANT AERIAL LADDER AND BODY ASSEMBLY
-
FOR: MYRTLE BEACH FIRE DEPARTMENT
MYRTLE BEACH, SC
DWG NO.: 42337AD

JOB NO.	42337
SCALE	1:24
DATE	20MAY24
DRAWN BY	ANZ
CHECKED BY	AST
DATE	24JUN24
SHEET SIZE	D
SHEET NO.	1 OF 1

View File Created 13-SEP-2024 08:31:23