PUMPER

BODY
Long Aluminum 2nd Gen Pumper

CHASSIS
Enforcer Chassis

ELECTRICAL SYSTEM
MUX

CHASSIS

AXLE, FRONT, CUSTOM
20,050 Lb TAK-4 Axle

AXLE, REAR
27,000 Lb Dana Axle

ENGINE
510 HP Paccar MX13 Engine

TRANSMISSION
ALLison 6th Gen, 4000 EVS P

BUMPER
19" Extended Painted Steel

CAB
7010 Enforcer Cab

BODY

TOTAL TANK CAPACITY
750 Gallon New York Style Poly Tank

WATER CAPACITY
750 Gallons of Water

FOAM CELL CAPACITY
Foam Cell Not Required

COMPT, PUMPER, REAR
30.75" FF Rollup Rear Compt

COMPT, PUMPER, LEFT SIDE
161" Lap Full Height Front & Rear FDLER

COMPT, PUMPER, RIGHT SIDE
161" Lap Full Height Front & Rear FDLER

FIRE SUPPRESSION

PUMPHOUSE
48" Control Zone Side Mount

PUMP
1500 GPM Waterous CSU

CROSSLAYS, 1.50"
(3) 1.50" Standard Capacity

CROSSLAYS, 2.50"
2.50" Crosslay Not Required

SPEEDLAYS
Speedlays Not Required

GENERATOR
Generator Not Required

FOAM SYSTEM
Foam System Not Required

SAFETY
Side Roll and Frontal Impact Protection

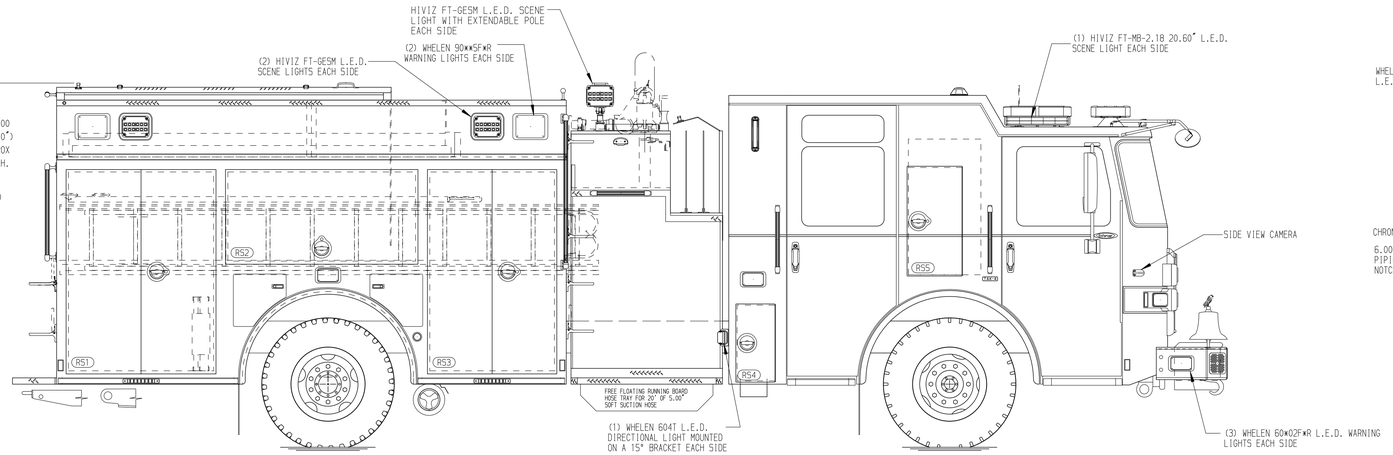

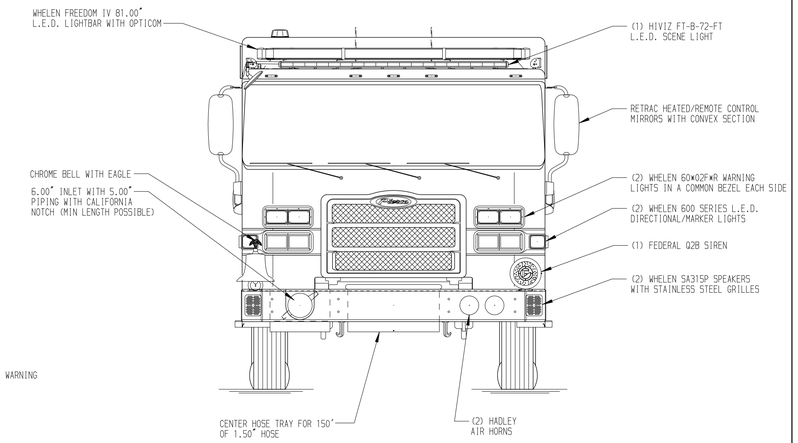

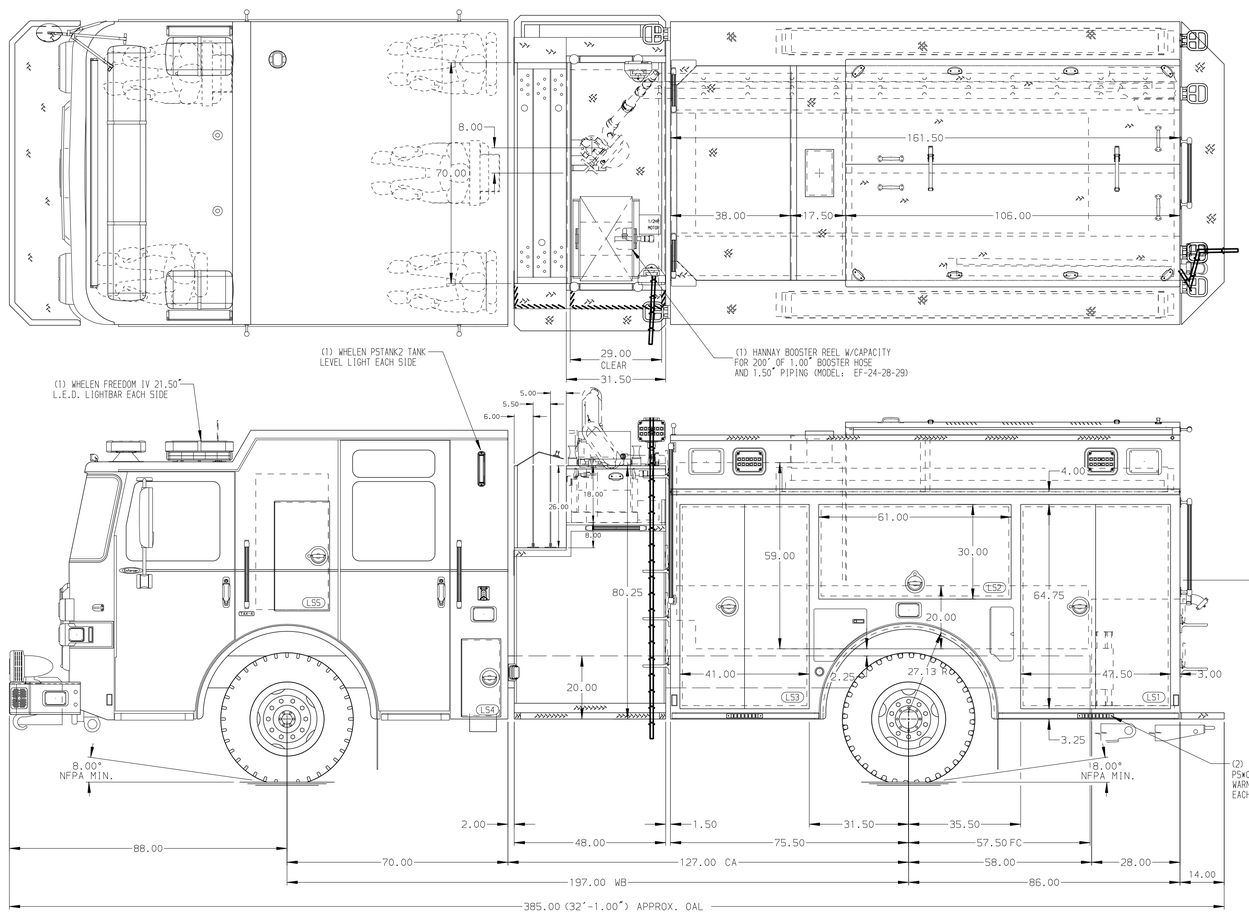

HOSEBED CAPACITIES
1. 500' OF 1.75" D.J. POLY HOSE
2. 500' OF 1.75" D.J. POLY HOSE
3. 500' OF 2.50" D.J. POLY HOSE
4. 1000' OF 5.00" D.J. POLY HOSE
5. OPEN BED

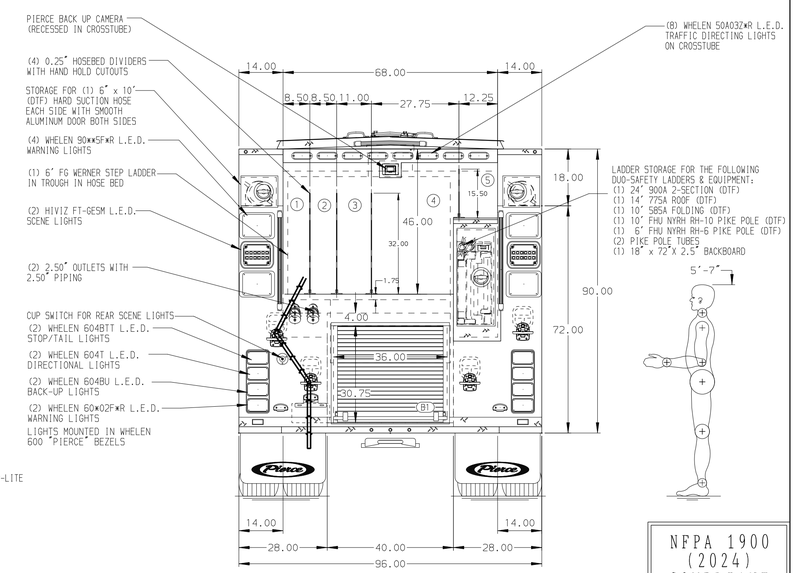

NFPA 1900 (2024) COMPLIANT

Pierce MANUFACTURING INC.

JOB NO.	42400
SCALE 1:24	DATE
DRAWN BY JAM	240CT25
CHECKED BY MMF	240CT25
SHEET SIZE D	SHEET NO. 1 OF 1

TITLE: Pierce Pumper Approval Drawing
FOR: City Of Suffolk, Virginia
DWG NO.: 42400AD

CHASSIS DATA — MAKE: PIERCE — MODEL: ENFORCER

REV	DATE	BY	CH
V	12JUN26	JAM	CSH
V	19DEC25	JAM	CSH
V	21NOV25	JAM	CSH

NOTE
DIMENSIONS SHOWN ARE APPROXIMATE AND ARE SUBJECT TO MINOR DEVIATIONS AS MAY OCCUR OR BE NECESSARY IN CONSTRUCTION.
MINOR DETAILS NOT SHOWN.

1. ONE 1.50 OUTLET WITH 2.00 PIPING AND SWIVEL LOCATED IN CENTER BUMPER TRAY
2. SHORELINE RECEPTACLE WITH BLUE SEA SURE AUTO-EJECT LOCATED ON DRIVER SIDE OF THE CREW CAB
3. BATTERY CHARGER LOCATED PER ORDER
4. BATTERY CHARGE INDICATOR LOCATED ON DRIVER SEAT RISER
5. SIX ADJUSTABLE SHELVES LOCATED PER ORDER
6. ONE FLOOR MOUNTED SLIDE-OUT TRAY LOCATED PER ORDER
7. ONE CTECH CABINET LOCATED PER ORDER
8. ONE SWING-OUT TOOLBOARD LOCATED PER ORDER
9. ONE MOUNTING PLATE LOCATED PER ORDER
10. SIX J-HOOKS LOCATED PER ORDER
11. FIVE PEGBOARDS LOCATED PER ORDER
12. WHEEL CHOCKS AND MOUNTING PROVIDED BY DEALER
13. 6' WERNER STEP LADDER LOCATED IN COMPARTMENTS PER ORDER

View File Created 12-JUN-2026 07:49:00