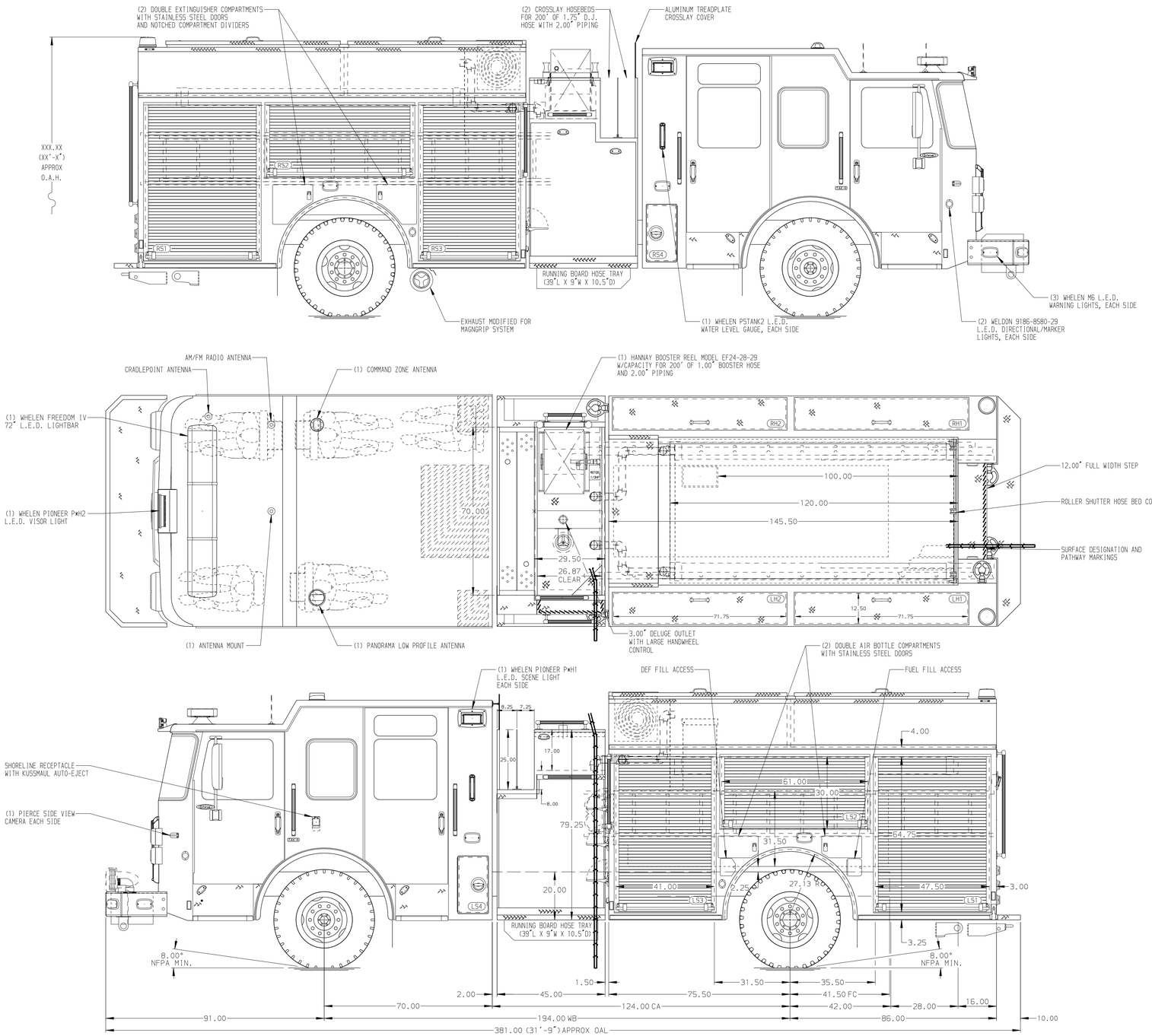

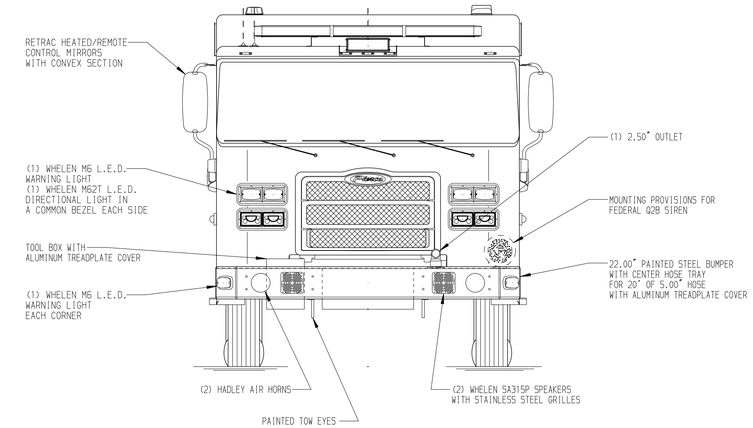

HOSEBED CAPACITIES

1. 300' OF 2.50" D.J. POLY HOSE
2. 1000' OF 5.00" D.J. POLY HOSE
3. 800' OF 2.50" D.J. POLY HOSE
4. 200' OF 1.75" D.J. POLY HOSE

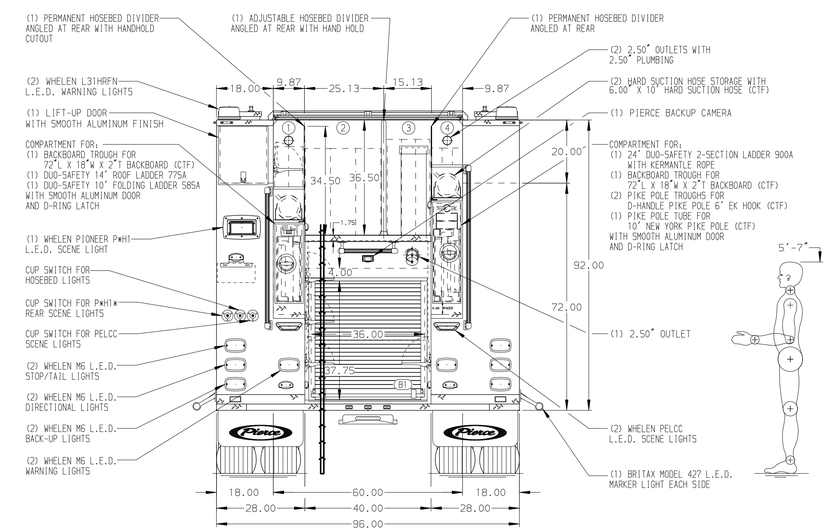

ALUMINUM BODY

NOTE

DIMENSIONS SHOWN ARE APPROXIMATE AND ARE SUBJECT TO MINOR DEVIATIONS AS MAY OCCUR OR BE NECESSARY IN CONSTRUCTION.
MINOR DETAILS NOT SHOWN.

1. WHEEL CHOCKS AND MOUNTING PROVIDED BY CUSTOMER
2. AIR INLET W/ DISCONNECT COUPLING LOCATED AT DRIVER'S SIDE PUMP PANEL
3. AIR OUTLET WITH SHUT OFF VALVE LOCATED AT DRIVER'S SIDE PUMP PANEL
4. DUAL L.E.D. LIGHT STRIPS LOCATED IN HOSE BED
5. DUAL L.E.D. LIGHT STRIPS LOCATED IN CARGO BED
6. VANNER LIFESTAR INVERTER/BATTERY CHARGER BEHIND DRIVER'S SEAT
7. BATTERY CHARGE INDICATOR LOCATED ON DRIVER'S SEAT RISER

REV	DATE	BY	CH
B	27JAN25	JDA	JJR
A	13DEC24	JDA	JJR

CHASSIS DATA
MAKE: PIERCE
MODEL: ENFORCER

Pierce MANUFACTURING INC.

TITLE: 1750GPM, 500G WATER TANK 161" PUMPER, MUX
FOR: JACKSONVILLE FIRE AND RESCUE JACKSONVILLE, FLORIDA
DWG NO.: 42431AD-SH1

JOB NO.	42431 01-03
SCALE	1:24
DATE	110CT24
DRAWN BY	JDA
CHECKED BY	JJR
140CT24	
SHEET SIZE	D
SHEET NO.	1 OF 2

View File Created 28-JAN-2025 13:49:52