RIGHT SIDE COMPARTMENTS CONTAIN THE FOLLOWING:

COMPARTMENT RS1 CONTAINS:
- (2) STD DEPTH ON-SCENE TILT TRAYS
- (1) 15/20A,120V DUPLEX RECEPTACLE
- PAC-TRAC ON BACK WALL OF COMPARTMENT
-

COMPARTMENT RS2 CONTAINS:
- (1) STD DEPTH ON-SCENE TILT TRAY
-
-

COMPARTMENT RS3 CONTAINS:
- (1) STD DEPTH ON-SCENE TILT TRAY
- (1) STD DEPTH ADJ SHELF
- (1) VERTICAL COMPARTMENT DIVIDER
- (1) RACK FOR 12 SCBA BOTTLES

COMPARTMENT RS4 CONTAINS:
- (1) VERTICAL COMPARTMENT DIVIDER
- (2) STD DEPTH ON-SCENE TILT TRAYS
- (1) STD DEPTH ADJ ON-SCENE TRAY
- (1) STD DEPTH ON-SCENE TRAY W/TOOLBOARD
- (1) STD DEPTH ON SCENE FLOOR TRAY
-

COMPARTMENT RS5 CONTAINS:
- (1) VERTICAL COMPARTMENT DIVIDER
- (1) HORIZONTAL FLOOR EXTENSION
- (2) STD DEPTH ON-SCENE TOOLBOARDS
- (1) 2-WAY ON-SCENE SLIDE OUT TOOLBOARD
- (1) FIN FORM/PLYWOOD RACK

COMPARTMENT RS6 CONTAINS:
- (1) CAB LIFT CONTROLLER
- (1) RACK FOR 6' ROOF LADDER
- (4) CUSTOM STORAGE TROUGHS
- (1) RACK FOR STOKES BASKET
-
-

COMPARTMENT RS7 CONTAINS:
- CHASSIS BATTERIES ON SLIDE OUT TRAY
-
-

COMPARTMENT RS8 CONTAINS:
- (1) STOKES BASKET RACK
-

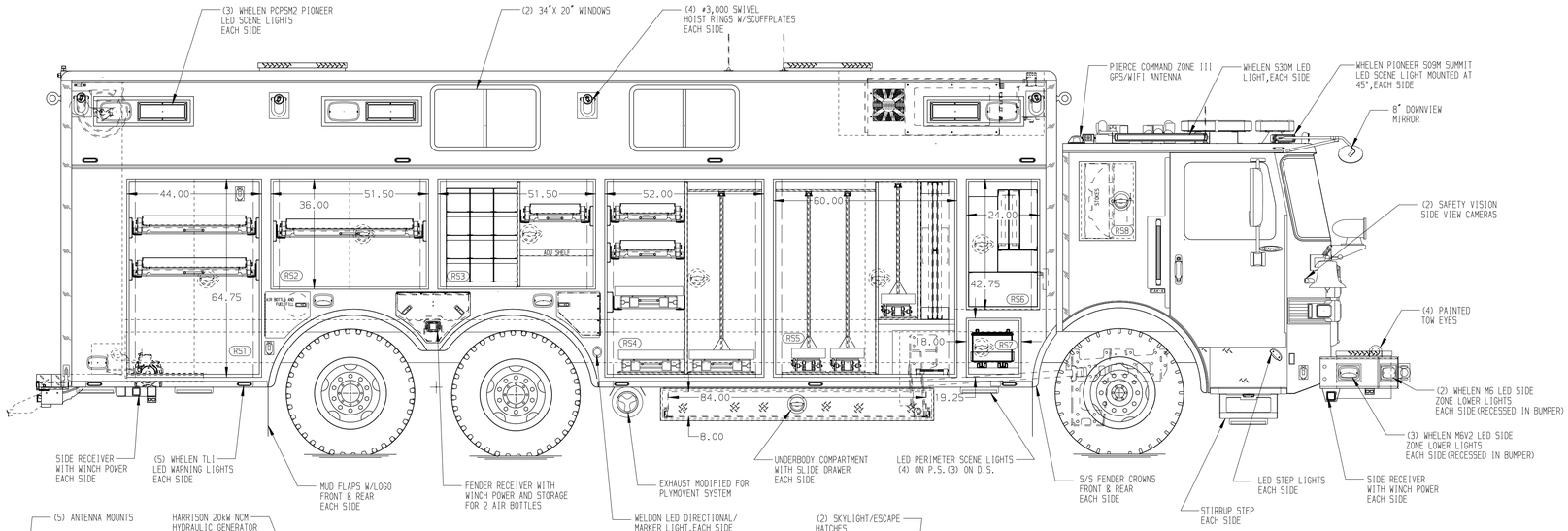

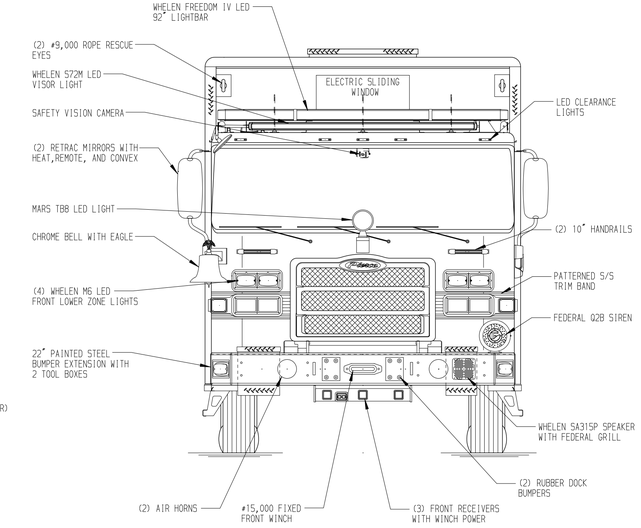

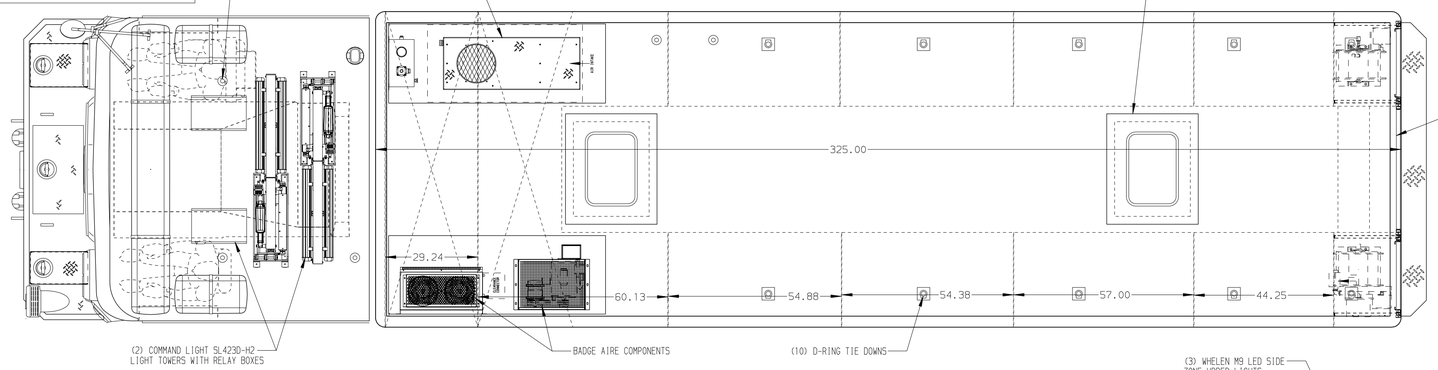

LEFT SIDE COMPARTMENTS CONTAIN THE FOLLOWING:

COMPARTMENT LS1 CONTAINS:
- (1) VERTICAL COMPARTMENT DIVIDER
- (2) STD DEPTH ON-SCENE TILT TRAYS
- (1) FLOOR MTD ON-SCENE SLIDE OUT TRAY
- (1) FLOOR MTD ON-SCENE SLIDE OUT TRAY WITH TOOLBOARD
- (1) 15/20A,120V DUPLEX RECEPTACLE

COMPARTMENT LS2 CONTAINS:
- (1) STD DEPTH ADJ SHELF
-
-

COMPARTMENT LS3 CONTAINS:
- (1) STD DEPTH ON-SCENE TILT TRAY
- (1) STD DEPTH ADJ SHELF
-
-

COMPARTMENT LS4 CONTAINS:
- (2) STD DEPTH ON-SCENE TILT TRAYS
- (1) STD DEPTH ON-SCENE FLOOR TRAY
- (1) STD DEPTH ADJ SHELF
-
-

COMPARTMENT LS5 CONTAINS:
- (1) 6 GALLON DEF TANK
- (1) VERTICAL COMPARTMENT DIVIDER
- (1) HORIZONTAL FLOOR EXTENSION
- (1) STD DEPTH ON-SCENE SLIDE OUT TRAY
- (1) STD DEPTH ON-SCENE TILT TRAY
- (1) STD DEPTH ADJ SHELF
- (1) 2-WAY ON-SCENE SLIDE OUT TOOLBOARD
- (1) FIN FORM/PLYWOOD RACK
- (1) CIRCUIT BREAKER PANEL
- (1) GENERATOR METER PANEL

COMPARTMENT LS6 CONTAINS:
- (2) RACKS FOR 6' ROOF LADDERS
- (1) RACK FOR LITTLE GIANT LADDER
- (3) CUSTOM STORAGE TROUGHS
-
-
-
-
-

COMPARTMENT LS7 CONTAINS:
- CHASSIS BATTERIES ON SLIDE OUT TRAY
-
-

COMPARTMENT LS8 CONTAINS:
- (1) STOKES BASKET RACK
- (2) COMMAND LIGHT CONTROLLERs

REAR COMPARTMENT CONTAINS THE FOLLOWING:

COMPARTMENT B1 CONTAINS:
- (1) ELECTRIC CORD REEL WITH 200' OF 10/4 YELLOW CORD
-
-
-

COMPARTMENT B2 CONTAINS:
- (1) TOOL AIR REEL WITH 200' OF HOSE REGULATOR AND GAUGES FOR AIR REEL
-
-
-

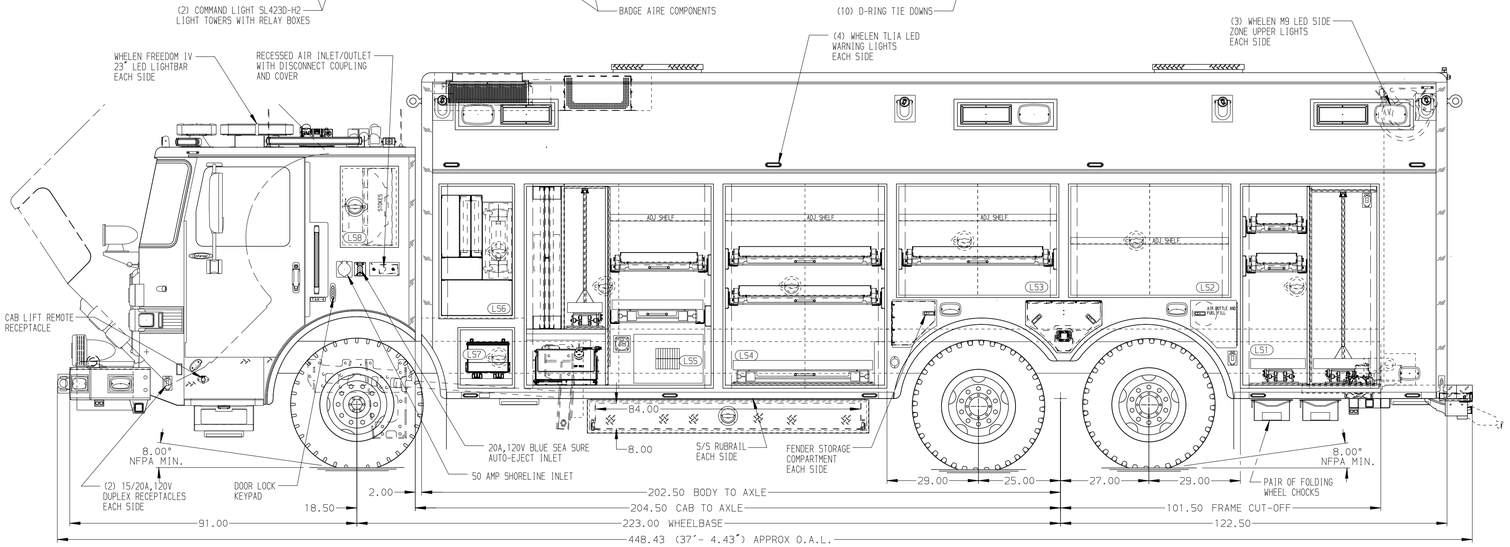

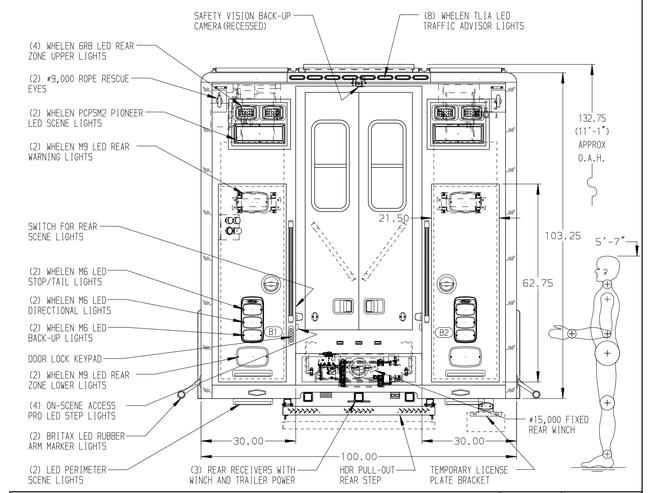

NOTE

DIMENSIONS SHOWN ARE APPROXIMATE AND ARE SUBJECT TO MINOR DEVIATIONS AS MAY OCCUR OR BE NECESSARY IN CONSTRUCTION.
MINOR DETAILS NOT SHOWN.

NOTES:
1. RUD AUTOMATIC TIRE CHAINS
2. POLISHED S/S SCUFFPLATES ON CAB DOOR JAMBS
3. ALUMINUM TREADPLATE ON CAB FLOOR
4. BLUE SEA P12 40 AMP CHARGER LOCATED BEHIND THE DRIVER'S SEAT
5. BATTERY CHARGE INDICATOR LOCATED ON DRIVER'S SEAT RISER
6. BRUSHED S/S ON FRONT AND REAR BODY CORNERS, AND REAR CAB CORNERS
7. PIERCE LED STRIP LIGHTS LOCATED IN ALL BODY COMPARTMENTS

NOTE:
LAP DOORS HAVE BEEN SHOWN IN HIDDEN LINES TO CLEARLY IDENTIFY THE EQUIPMENT IN EACH COMPARTMENT. DASHED LINES ON SIDES ARE DOORS IN OPEN POSITION

NFPA 1900 (2024) COMPLIANT

SIDE ROLL AND FRONTAL IMPACT PROTECTION

CLEAR DOOR WIDTH KEY	
AMDOR ROLL UP DOORS:	-2 1/4"
GORTITE ROLL UP DOORS:	-2 1/2"
PIERCE DOUBLE LAP DOORS:	-4 1/4"
PIERCE LIFT-UP LAP DOORS:	-1 1/2"

(EX: 60"F-F - 2 1/4"= 57 3/4" CLEAR)
(F-F)= FRAME TO FRAME

REV	DATE	BY	CH
1	01APR26	DHE	CDK
2	24NOV25	DHE	CDK
3	04NOV25	DHE	AZU
4	29SEP25	DHE	CDK
5	26SEP25	DHE	CDK
6	09SEP25	DHE	CDK
7	27JUN25	DHE	GFI

CHASSIS DATA
MAKE PIERCE
MODEL EN1800

Pierce MANUFACTURING INC.

TITLE: HEAVY DUTY RESCUE
WALKIN

FOR: OLATHE FIRE DEPARTMENT — BID #511
CONRAD FIRE EQUIPMENT — KARL SCHULTZ

DWG NO. 42496AD-SH1

JOB NO.	42496
SCALE	1:24
DATE	01MAY25
DRAWN BY	DHE
CHECKED BY	GFI
DATE	2MAY25
SHEET SIZE	D
SHEET NO.	1 OF 2

View File Created 02-APR-2026 10:07:11