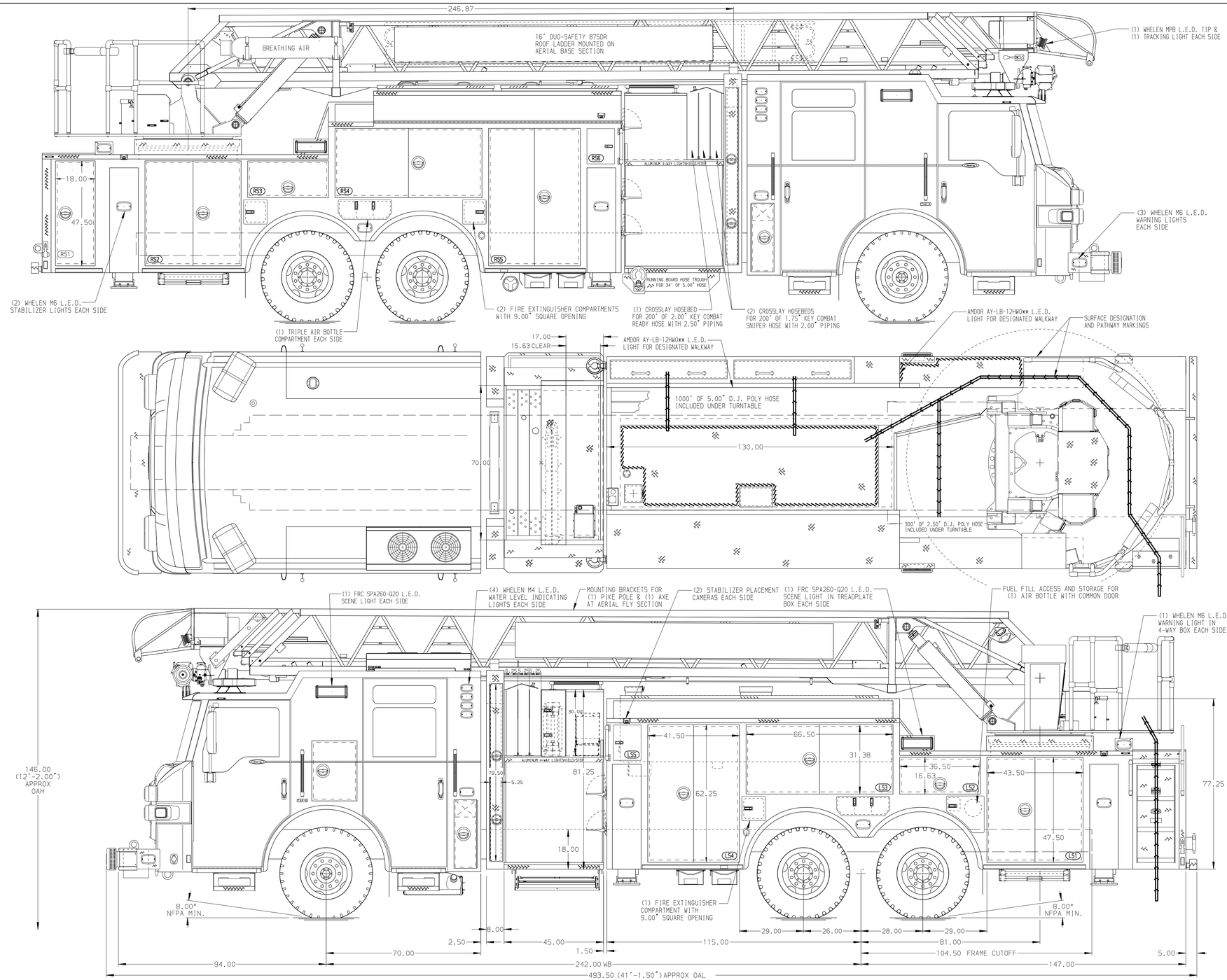

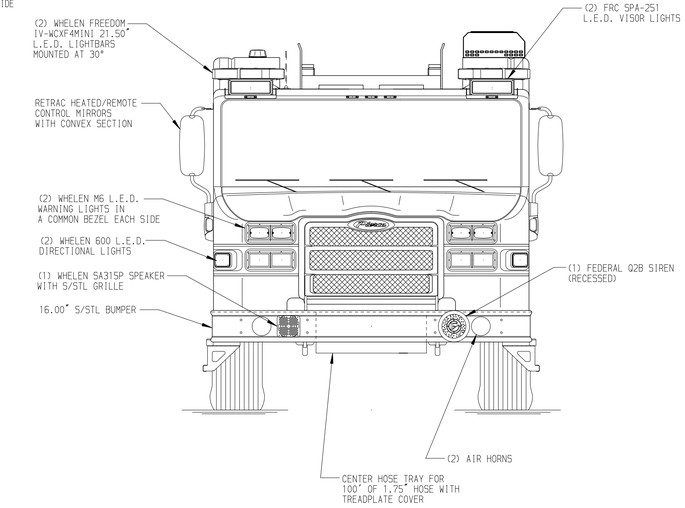

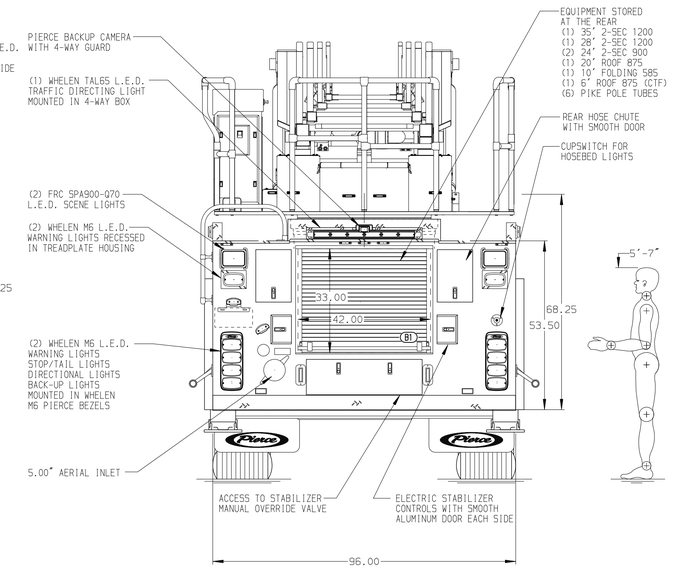

ALUMINUM BODY | SIDE ROLL AND FRONTAL IMPACT PROTECTION

NOTE

DIMENSIONS SHOWN ARE APPROXIMATE AND ARE SUBJECT TO MINOR DEVIATIONS AS MAY OCCUR OR BE NECESSARY IN CONSTRUCTION.
MINOR DETAILS NOT SHOWN.

1. NO LIMITED RETRACTION REQUIRED
2. ONE 1.50 OUTLET WITH 2.00 PIPING AND SWIVEL LOCATED IN CENTER BUMPER TRAY
3. SHORELINE RECEPTACLE WITH KUSSMAUL SUPER AUTO-EJECT LOCATED ON DRIVER SIDE FRONT CAB CORNER
4. AIR INLET/OUTLET WITH DISCONNECT FITTING ON THE DRIVER SIDE PUMP PANEL
5. BATTERY CHARGER LOCATED PER ORDER
6. BATTERY CHARGE INDICATOR LOCATED ON DRIVER SEAT RISER
7. EIGHT ADJUSTABLE SHELVES LOCATED IN COMPARTMENTS PER ORDER
8. ONE FLOOR MOUNTED SLIDE-OUT TRAY LOCATED IN COMPARTMENT PER ORDER
9. THREE MOUNTING PLATES LOCATED IN COMPARTMENTS PER ORDER
10. FOUR EQUIPMENT STORAGE RACKS LOCATED IN COMPARTMENTS PER ORDER
11. FOUR RECEPTACLES LOCATED PER ORDER
12. TWO TILT/SLIDE-OUT TRAYS LOCATED IN COMPARTMENTS PER ORDER
13. ONE FLOOR MOUNTED SLIDE-OUT TRAY LOCATED IN COMPARTMENT PER ORDER
14. ONE ELECTRIC HEATER LOCATED IN COMPARTMENT PER ORDER
15. TWO EQUIPMENT MOUNTING TRACK SYSTEMS LOCATED IN COMPARTMENTS PER ORDER
16. TRIDENT AERIAL DEVICE STEPS 14" CLOSER TO AERIAL TIP THAN STANDARD
17. LIFTING EYE ROPE RESCUE ATTACHMENT AT AERIAL TIP
18. 3.00" RAISED AERIAL PEDESTAL
19. TECNIQ 4-SECTION RUNG LIGHTING AT AERIAL DEVICE

REV	DATE	BY	CH
D	14NOV25	LWE	JKR
C	10NOV25	ANZ	JKR
B	25SEP25	ANZ	JKR
A	18JUL25	ANZ	BYO

CHASSIS DATA
MAKE: PIERCE
MODEL: VELOCITY

Pierce MANUFACTURING INC.

TITLE: 105' AERIAL LADDER AND BODY ASSEMBLY
520 GALLON TANK, 500 WATER / 20 FOAM
FOR: ROCK COMMUNITY FIRE PROTECTION DISTRICT
ARNOLD, MO
DWG NO.: 42517AD

JOB NO.	42517
SCALE	1:24
DATE	
DRAWN BY	ANZ 30JUN25
CHECKED BY	BYO 14JUL25
SHEET SIZE	D
SHEET NO.	1 OF 1

View File Created 14-NOV-2025 14:45:23