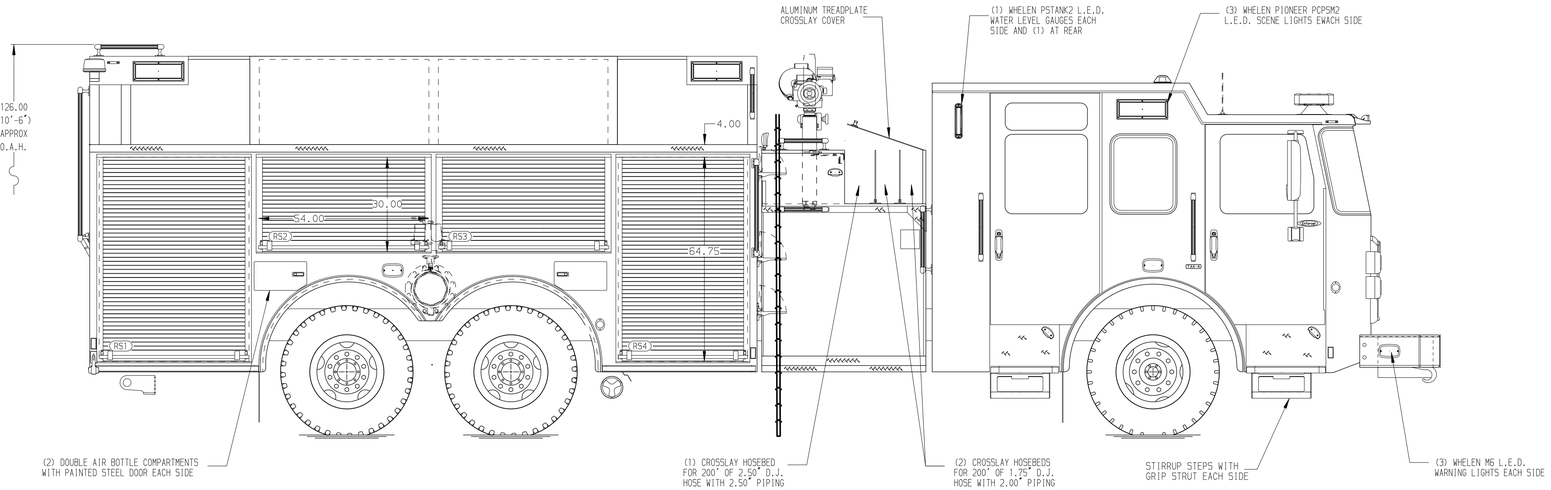

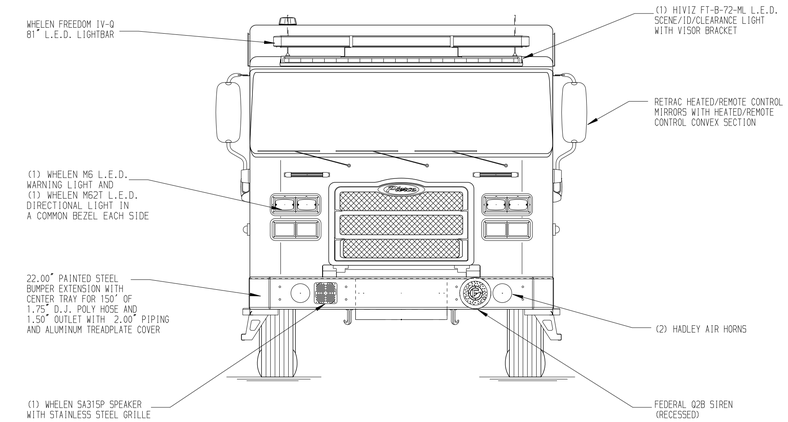

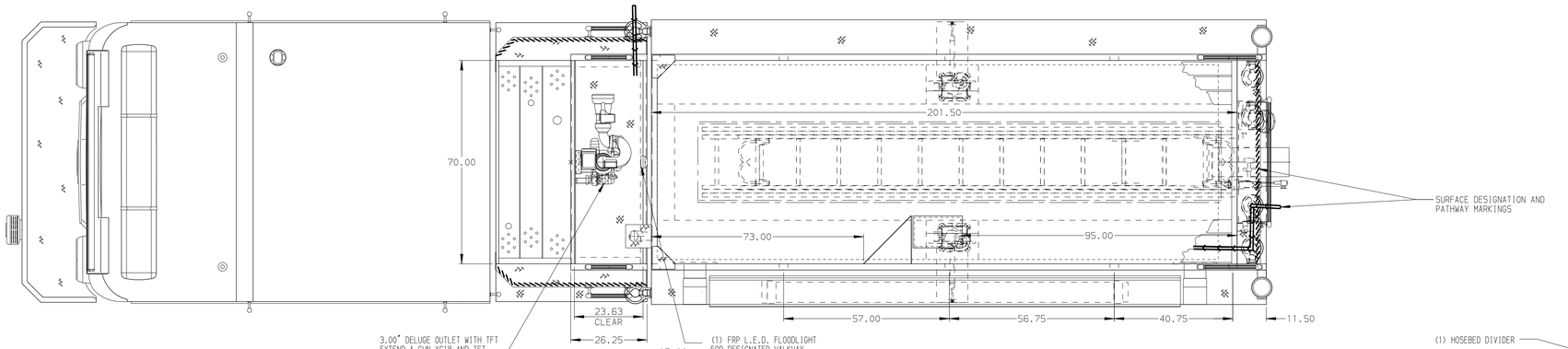

HOSEBED CAPACITIES

1 - 300' OF 3.00" D.J. POLY HOSE
2 - 1000' OF 5.00" D.J. POLY HOSE

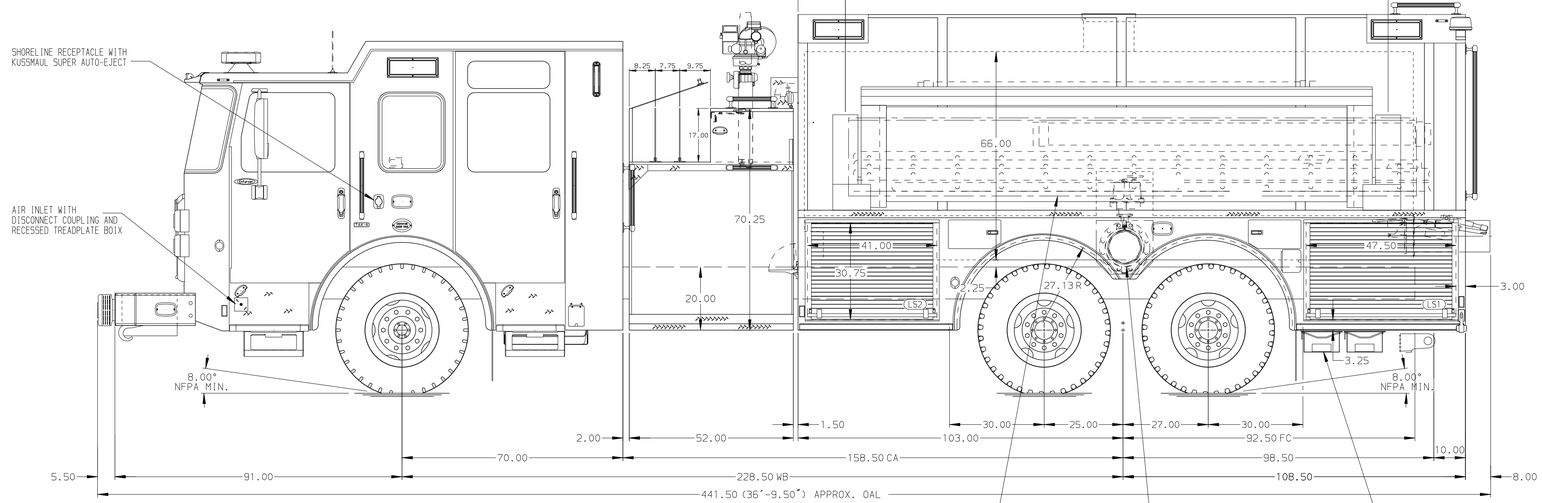

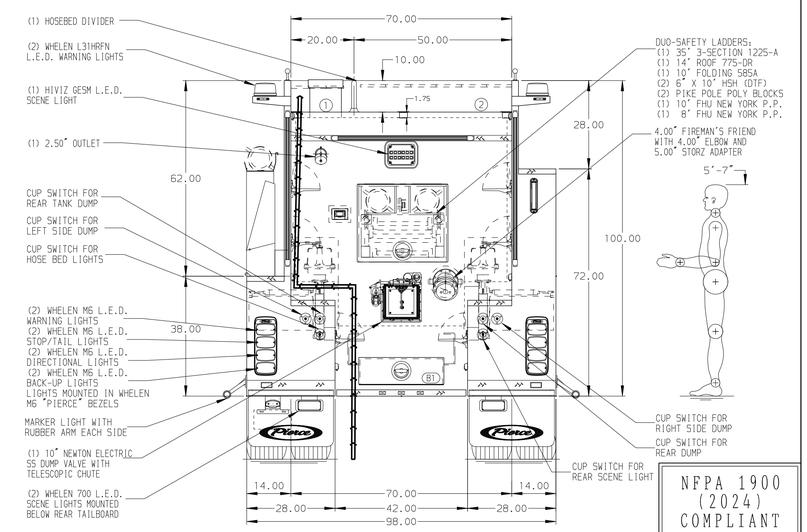

ALUMINUM BODY | SIDE ROLL AND FRONTAL IMPACT PROTECTION

NFPA 1900 (2024) COMPLIANT

NOTE

DIMENSIONS SHOWN ARE APPROXIMATE AND ARE SUBJECT TO MINOR DEVIATIONS AS MAY OCCUR OR BE NECESSARY IN CONSTRUCTION.
MINOR DETAILS NOT SHOWN.

1. DUAL L.E.D. LIGHT STRIPS LOCATED IN HOSE BED

REV	DATE	BY	CH
V	25APR25	KLE	SJS
V	13MAR25	JJB	SJS
V	07FEB25	JJB	CDU

CHASSIS DATA
MAKE: PIERCE
MODEL: ENFORCER

Pierce MANUFACTURING INC.

TITLE: 2000 GPM, 2500 GALLON WATER TANK 211" 2G DRY SIDE TANKER, MUX
FOR: SHAWNEE TOWNSHIP FIRE DEPARTMENT LIMA, OHIO
DWG NO.: 42669AD

JOB NO.	42669
SCALE 1:24	DATE
DRAWN BY JJB	29JAN25
CHECKED BY CDU	19JAN25
SHEET SIZE D	SHEET NO. 1 OF 1

View File Created 25-APR-2025 11:27:16