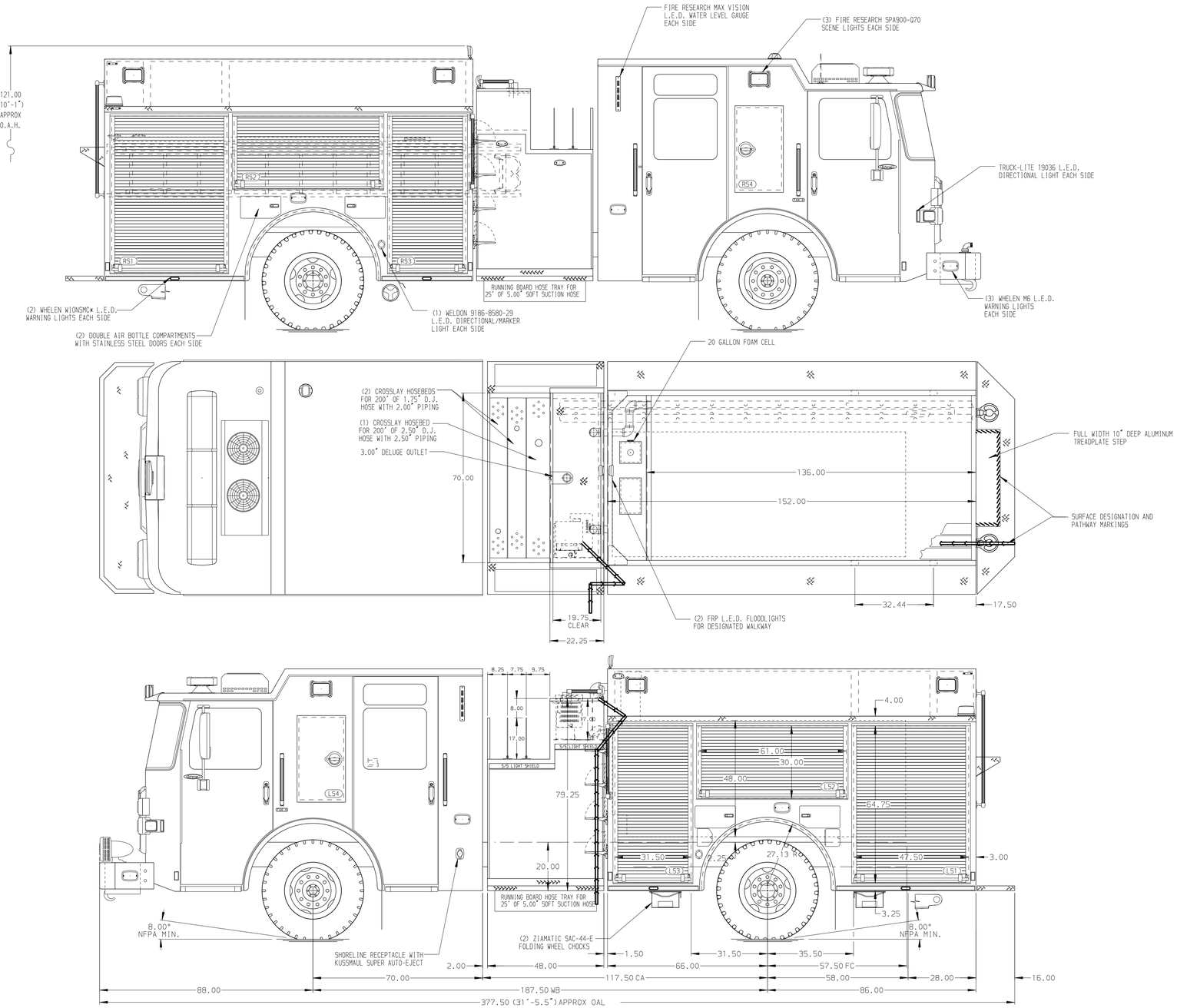

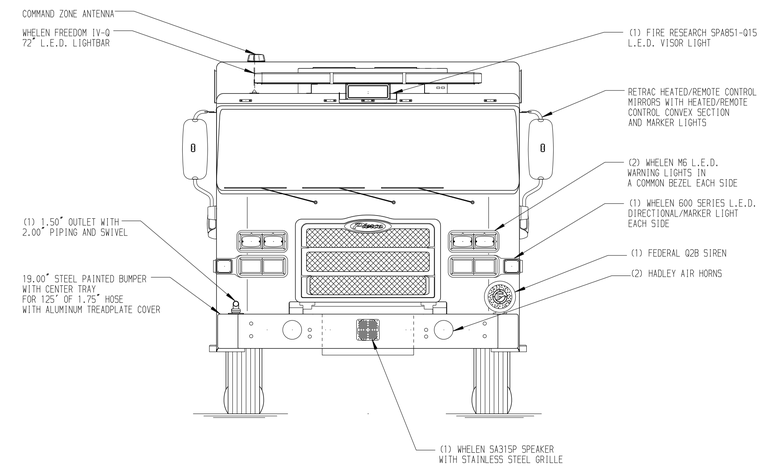

HOSEBED CAPACITIES

1. 500' OF 3.00" D.J. HOSE
2. 1000' OF 5.00" D.J. HOSE
3. 500' OF 3.00" D.J. HOSE

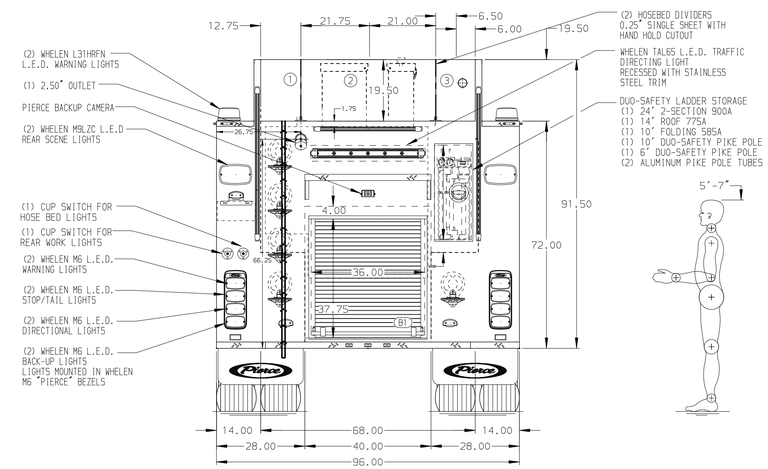

ALUMINUM BODY

SIDE ROLL AND FRONTAL IMPACT PROTECTION

NOTE

DIMENSIONS SHOWN ARE APPROXIMATE AND ARE SUBJECT TO MINOR DEVIATIONS AS MAY OCCUR OR BE NECESSARY IN CONSTRUCTION.
MINOR DETAILS NOT SHOWN.

1. BATTERY CHARGER MOUNTED BEHIND DRIVER'S SEAT
2. BATTERY CHARGER INDICATOR BEHIND DRIVER'S SEAT DISPLAYED THROUGH WINDOW
3. DUAL L.E.D. LIGHT STRIPS LOCATED IN HOSE BED
4. SEVEN DRIP PAN GUARDS FOR ROLL-UP DOORS LOCATED PER ORDER
5. SIX FULL WIDTH/DEPTH ADJUSTABLE SHELVES LOCATED PER ORDER
6. AIR INLET WITH DISCONNECT COUPLING LOCATED IN DS STEP WELL
7. PLUMBING FOR FUTURE FOAM SYSTEM

REV	DATE	BY	CH
V	10DEC24	MMF	AST

CUSTOMER APPROVAL

APPROVED BY: _____

DATE: _____

CHASSIS DATA

MAKE: PIERCE

MODEL: ENFORCER

Pierce MANUFACTURING INC.

TITLE: 1500-D-1000P, 980 GAL WATER W/20 GAL FOAM,152" BODY (3) CROSSLAYS, HUSKY 3, LADDERS BTWN TANK & SS

FOR: PIERCE FIELD UNIT APPLETON, WISCONSIN

DWG NO.: 42736AD

JOB NO.	42736
SCALE	1:24
DATE	140CT24
DRAWN BY	MMF
CHECKED BY	AST
150CT24	
SHEET SIZE	D
SHEET NO.	1 OF 1

View File Created 10-DEC-2024 10:03:29