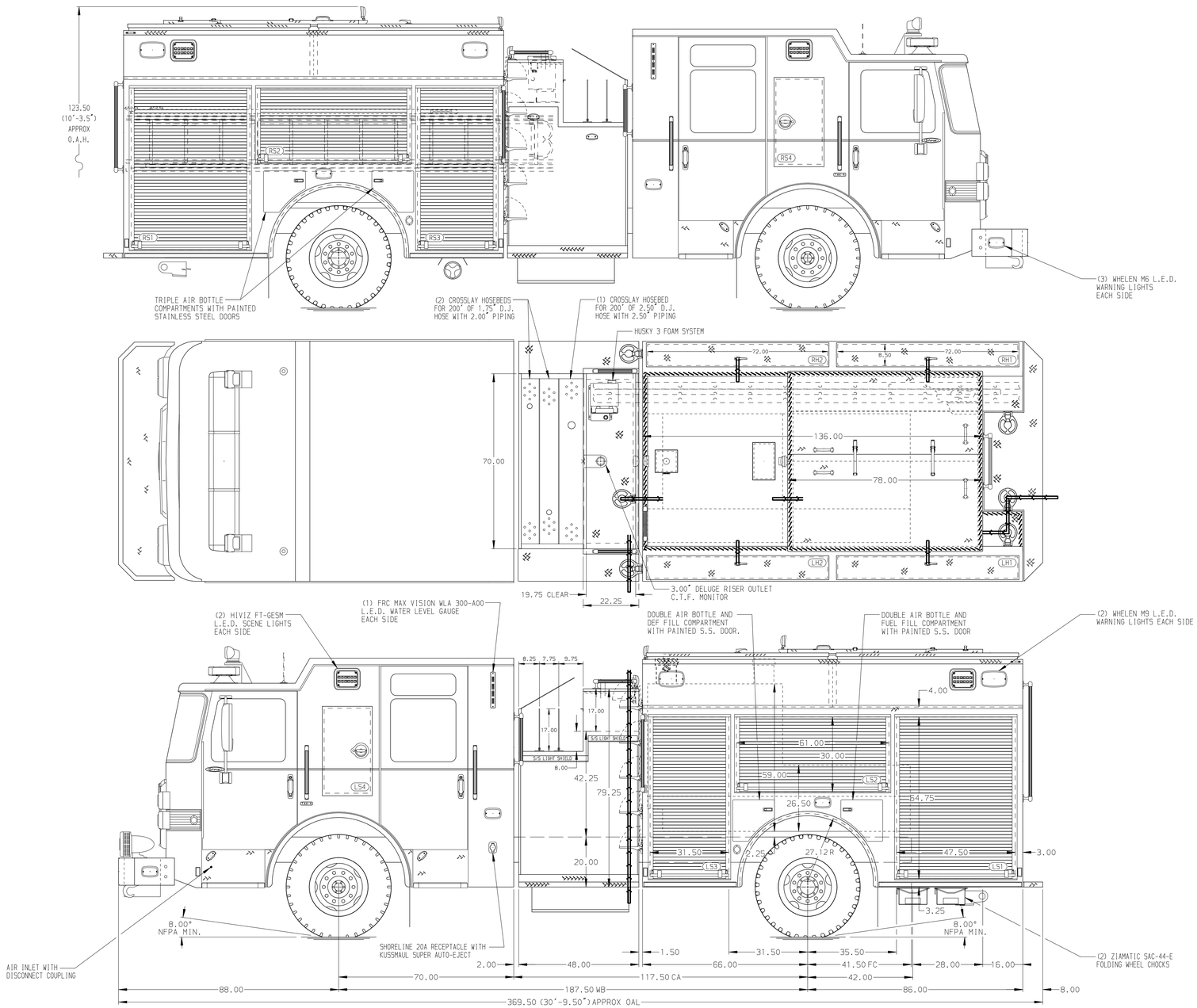

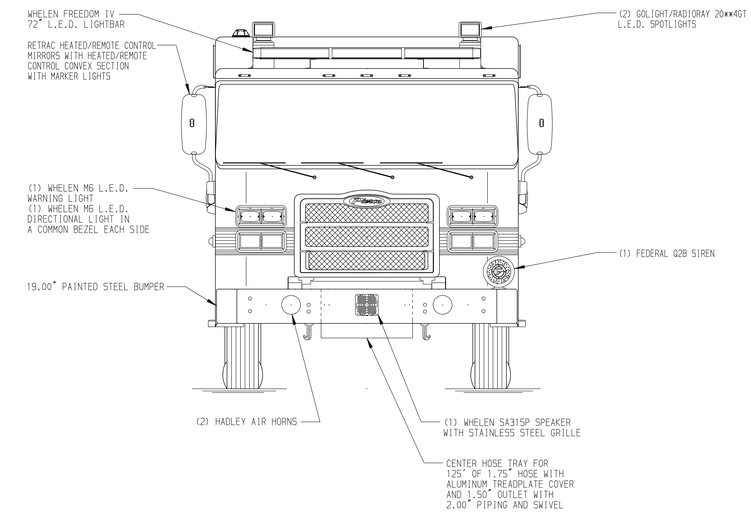

HOSEBED CAPACITIES

1. 750' OF 3.00" D.J. POLY HOSE
2. 1000' OF 5.00" D.J. POLY HOSE
3. 250' OF 3.00" D.J. POLY HOSE

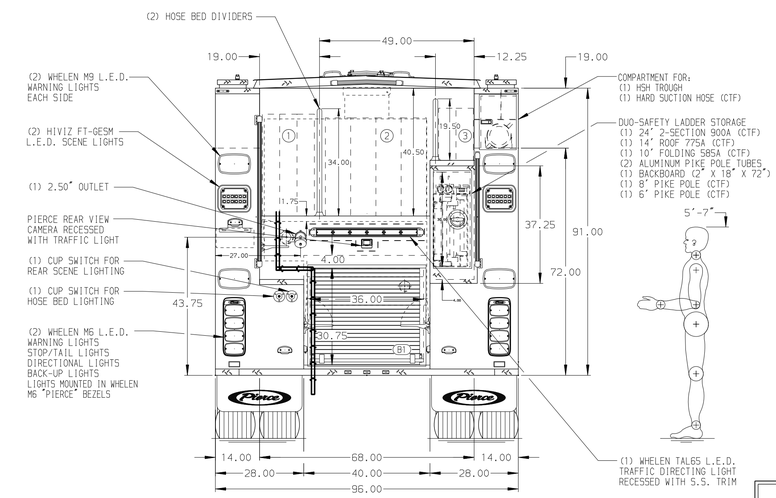

NFPA 1900 (2024) COMPLIANT

ALUMINUM BODY | SIDE ROLL AND FRONTAL IMPACT PROTECTION

NOTE

DIMENSIONS SHOWN ARE APPROXIMATE AND ARE SUBJECT TO MINOR DEVIATIONS AS MAY OCCUR OR BE NECESSARY IN CONSTRUCTION.
MINOR DETAILS NOT SHOWN.

1. BATTERY CHARGE INDICATOR LOCATED ON DRIVER'S SEAT RISER
2. ONSPOT TIRE CHAINS TO BE PROVIDED AT REAR
3. WIRING AND REINFORCEMENT FOR LIGHT TOWER (MODEL: W-B CHF NS1.8-4 WHL 4-PFH2 12VDC) TO BE PROVIDED ON ROOF OF CAB

REV	DATE	BY	CH
3	11FEB25	JDA	AST
2	03FEB25	JDA	JKR
1	18NOV24	SDR	AST

CHASSIS DATA
MAKE: PIERCE
MODEL: ENFORCER

Pierce MANUFACTURING INC.

TITLE: 1500 GPM, 770G TANK, 750G WATER, 20G FOAM 152" PUMPER, HARDWIRED
FOR: PIERCE FIELD UNIT APPLETON, WISCONSIN
DWG NO.: 42831AD

JOB NO.	42831
SCALE 1:24	DATE
DRAWN BY SDR	11SEP24
CHECKED BY KLH	11SEP24
SHEET SIZE D	SHEET NO. 1 OF 1

View File Created 25-FEB-2025 12:02:14