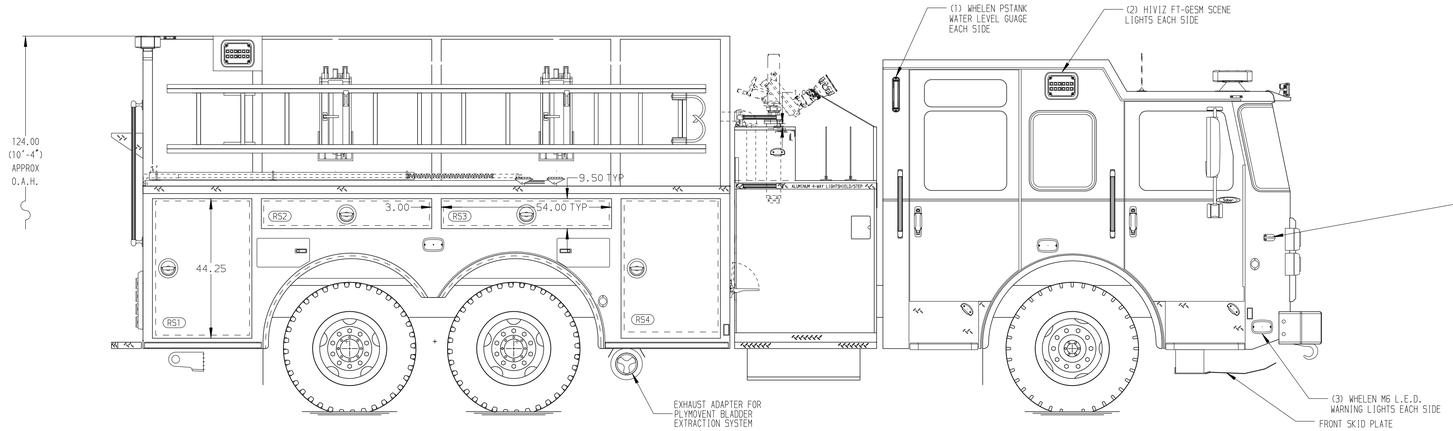

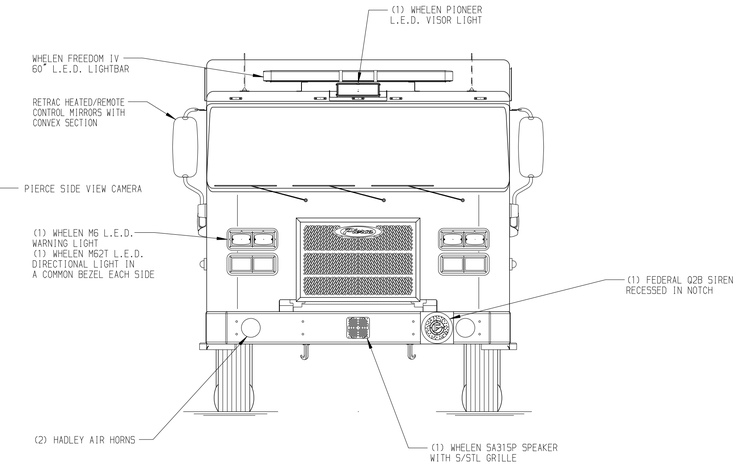

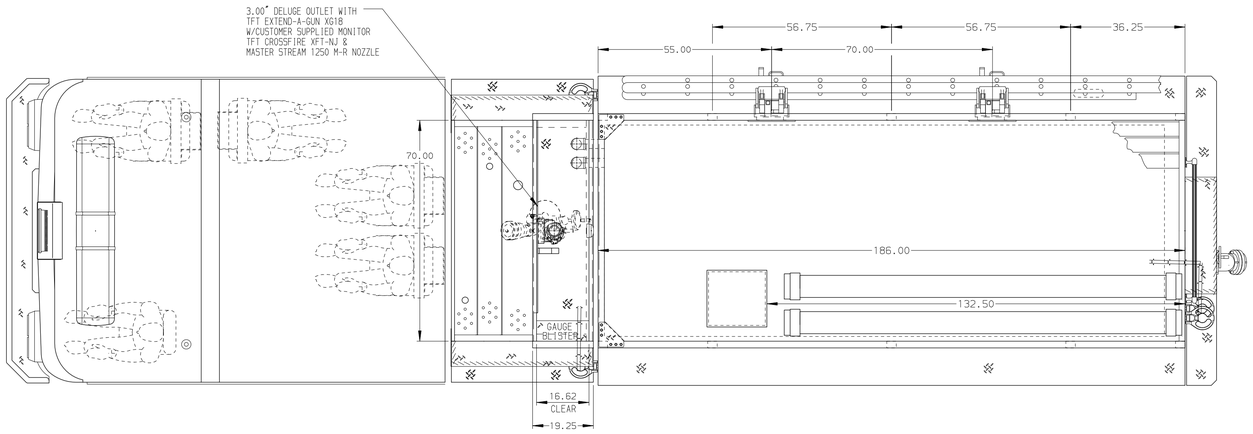

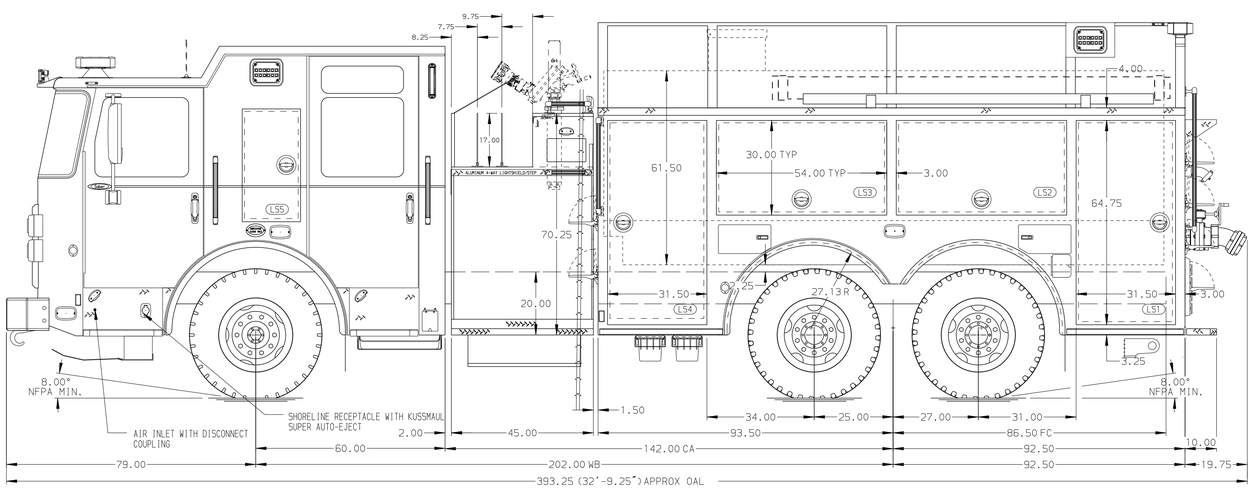

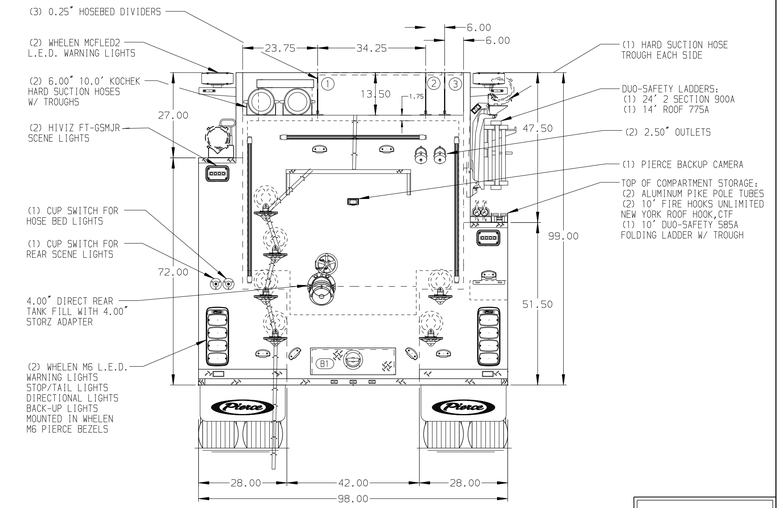

BODY	TOTAL TANK CAPACITY
Tanker, Aluminum, Tandem Axle, 186" Dry Side	2500 Gallon Poly Tank
COMPT,LEFT SIDE	WATER CAPACITY
Full Height Front & Rear Compt, Lap Doors	2500 Gallons of Water
COMPT,RIGHT SIDE	FOAM CELL CAPACITY
3/4 Height Front & Rear Compt, Lap Doors	Foam Cell Not Required
COMPT,REAR	FOAM SYSTEM
Rear Tool Compt	Foam System Not Required

HOSEBED CAPACITY

BED 1
1200' OF 4.00" D.J. POLY HOSE
BED 2
250' OF 2.50" D.J. POLY HOSE
BED 3
250' OF 2.50" D.J. POLY HOSE

NFPA 1900 (2024) COMPLIANT

CHASSIS	CAB	AXLE,FRONT,CUSTOM	TRANSMISSION	PUMPHOUSE	CROSSLAYS,1.50"	SPEEDLAYS	SAFETY
Saber FR Chassis	6010 Saber FR Cab	20,000 lb Dana Axle	ALLison 6th Gen, 4000 EVS P	45" Control Zone Side Mount	(2) 1.50" Standard Capacity	Speedlays Not Required	Side Roll and Frontal Impact Protection
ENGINE	BUMPER	AXLE,REAR		PUMP	CROSSLAYS,2.50"	GENERATOR	
510 HP Paccar MX13 Engine	10" Extended Painted Steel	48,000 lb Meritor Axle		2000 GPM Waterous CSU	(1) 2.50" Standard Capacity	Generator Not Required	

NOTE
DIMENSIONS SHOWN ARE APPROXIMATE AND ARE SUBJECT TO MINOR DEVIATIONS AS MAY OCCUR OR BE NECESSARY IN CONSTRUCTION.
MINOR DETAILS NOT SHOWN.

REV	DATE	BY	CH
7	25SEP25	RHU	DDR
6	26JUN25	RHU	MAR

CHASSIS DATA
MAKE: PIERCE
MODEL: SABER FR

Pierce MANUFACTURING INC.

TITLE: Pierce Pumper Approval Drawing
FOR: Plymouth Fire Department, NH
DWG NO.: 42862AD

JOB NO. 42862
SCALE 1:24
DATE
DRAWN BY LST 28APR25
CHECKED BY MMF 29APR25
SHEET SIZE D
SHEET NO. 1 OF 1

View File Created 26-SEP-2025 12:39:55