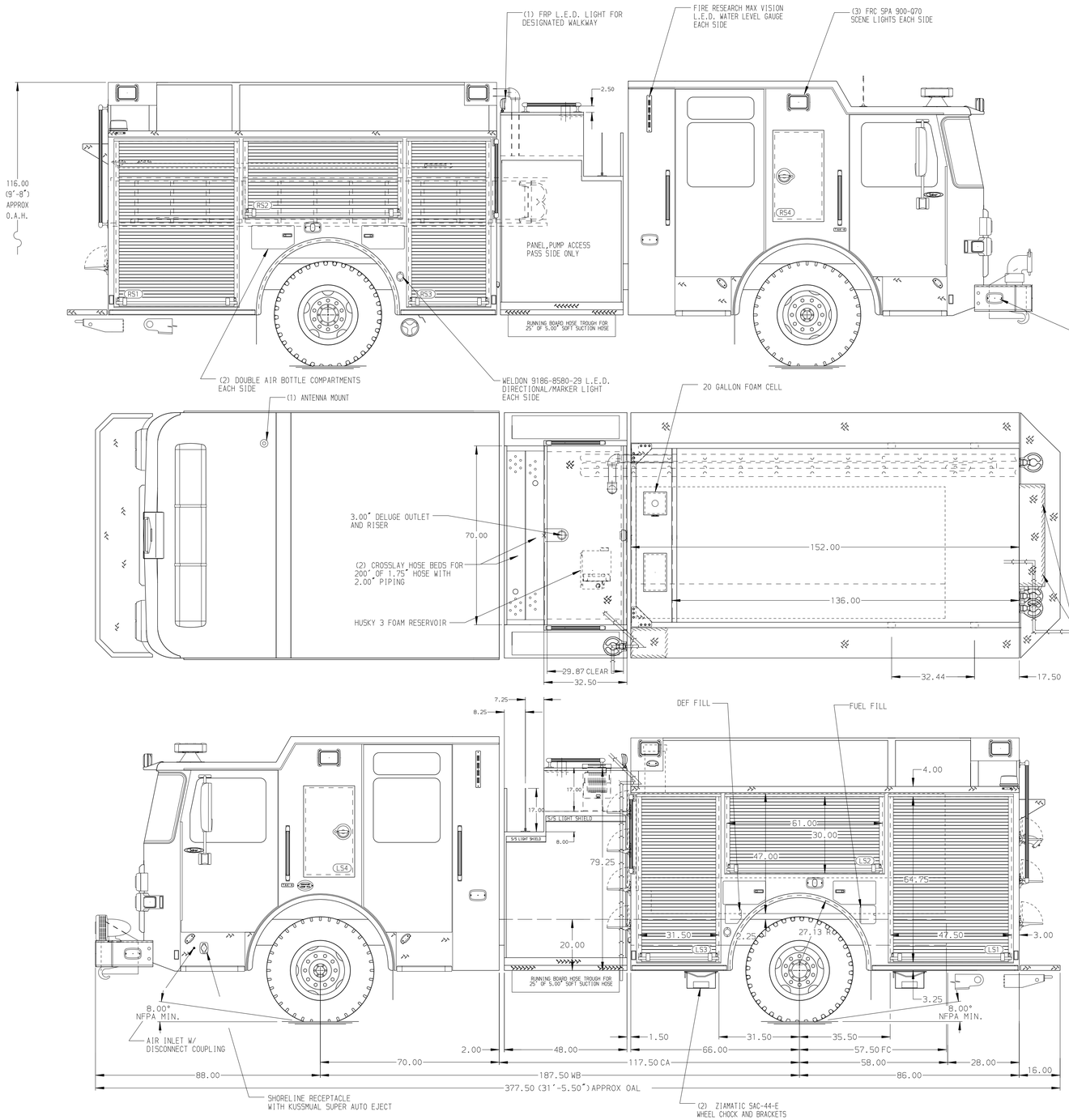

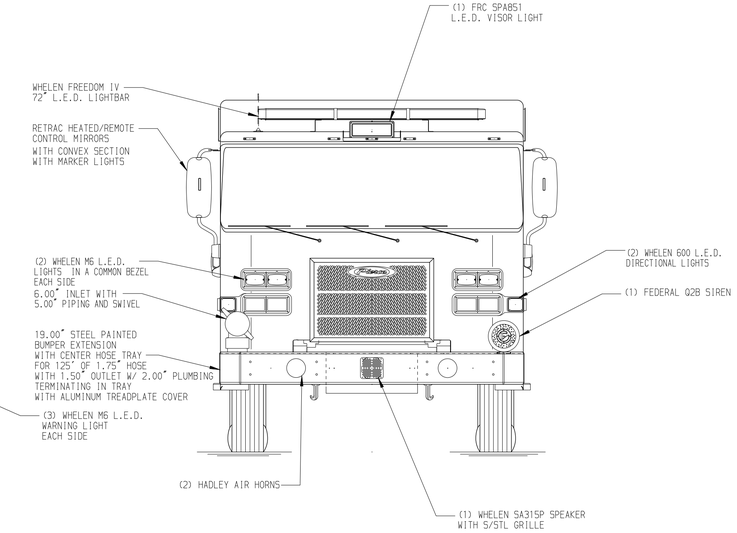

HOSEBED CAPACITIES

1. 500' OF 3.00" D.J. POLY HOSE
2. 1000' OF 5.00" D.J. POLY HOSE
3. 500' OF 3.00" D.J. POLY HOSE

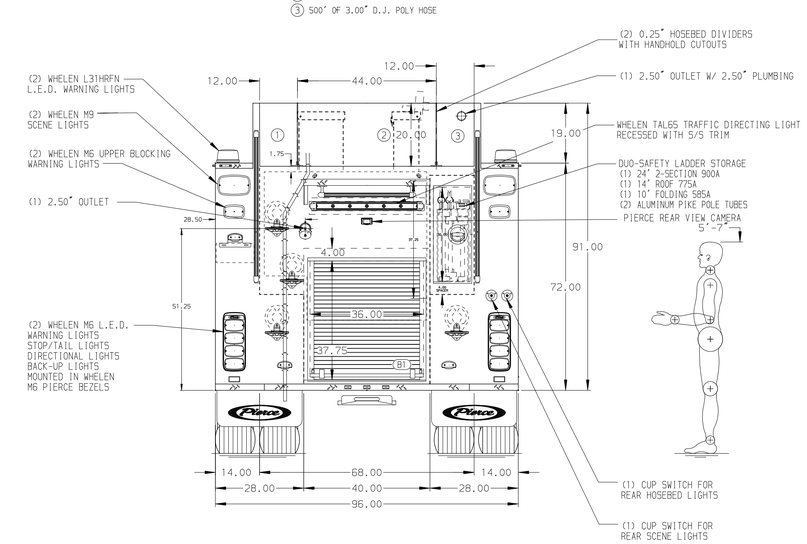

ALUMINUM BODY | SIDE ROLL AND FRONTAL IMPACT PROTECTION

NOTE

DIMENSIONS SHOWN ARE APPROXIMATE AND ARE SUBJECT TO MINOR DEVIATIONS AS MAY OCCUR OR BE NECESSARY IN CONSTRUCTION.
MINOR DETAILS NOT SHOWN.

REV	DATE	BY	CH
7	19SEP24	ADP	JAP
6	17SEP24	ADP	JAP
5	12JUN24	VHO	JAP

CHASSIS DATA — MAKE: PIERCE — MODEL: SABER FR

Pierce MANUFACTURING INC.

TITLE: 1500 GPM, 1000 TANK, 980 GAL OF WATER, 20 GAL FOAM 152" BODY, HARD WIRED

FOR: PIERCE FIELD UNIT, BRADENTON, FLORIDA

DWG NO.: 42990AD

JOB NO.	42990
SCALE	1:24
DATE	
DRAWN BY	LST 03JUN24
CHECKED BY	KLH 04JUN24
SHEET SIZE	D
SHEET NO.	1 OF 1

View File Created 20-SEP-2024 08:26:18